25HBC5
Comfort 15 Heat Pump
with Puron® Refrigerant
1–1/2 to 5 Nominal Tons

Carrier
turn to the experts™

Product Data

Puron™
the environmentally sound refrigerant

Carrier heat pumps with Puron® refrigerant provide a collection of features unmatched by any other family of equipment. The 25HBC has been designed utilizing Carrier's Puron refrigerant. The environmentally sound refrigerant allows consumers to make a responsible decision in the protection of the earth's ozone layer.

This product has been designed and manufactured to meet Energy Star® criteria for energy efficiency when matched with appropriate coil components. Refer to the combination ratings in the Product Data for system combinations that meet Energy Star® guidelines.

NOTE: **Ratings contained in this document are subject to change at any time. Always refer to the AHRI directory (www.ahridirectory.org) for the most up-to-date ratings information.**

INDUSTRY LEADING FEATURES / BENEFITS

Efficiency

- 15 SEER/ 12.5 EER / 8.0 - 9.0 HSPF
- Microtube Technology™ refrigeration system
- Indoor air quality accessories available

Sound

- Sound level as low as 69 dBA
- Sound levels as low as 68 dBA with accessory sound blanket

Comfort

- System supports Edge® Thermidistat™ or standard thermostat controls

Reliability

- Puron® refrigerant - environmentally sound, won't deplete the ozone layer and low lifetime service cost.
- Scroll compressor
- Internal pressure relief valve
- Internal thermal overload
- High pressure switch
- Loss of charge switch
- Filter drier
- Balanced refrigeration system for maximum reliability

Durability

WeatherArmor™ protection package:

- Solid, durable sheet metal construction
- Dense wire coil guard standard
- Baked-on powder paint

Applications

- Long-line - up to 250 feet (76.20 m) total equivalent length, up to 200 feet (60.96 m) condenser above evaporator, or up to 80 ft. (24.38 m) evaporator above condenser (See Longline Guide for more information.)
- Low ambient cooling (down to -20°F/-28.9°C) with accessory kit

MODEL NUMBER NOMENCLATURE

1	2	3	4	5	6	7	8	9	10	11	12	13
N	N	A	A	A/N	N	N	N	A/N	A/N	A/N	N	N
2	5	H	B	C	5	3	6	A	0	0	3	0
Product Series		Product Family	Tier	Major Series	SEER	Cooling Capacity		Grille Variations	Open	Open	Voltage	Minor Series
25 = HP		H = RES HP	B=Comfort	C = Puron	5=15 SEER			A = Dense	0=Not Defined	0=Not Defined	3=208/230–1	0, 1, 2...

Puron™
the environmentally sound refrigerant

AHRI CERTIFIED™ www.ahridirectory.org

Use of the AHRI Certified TM Mark indicates a manufacturer's participation in the program For verification of certification for individual products, go to www ahridirectory.org.

Certified System ™
ISO 9001
QMI-SAI Global

c UL us

ENERGY STAR

This product has been designed and manufactured to meet Energy Star® criteria for energy efficiency when matched with appropriate coil components. However, proper refrigerant charge and proper air flow are critical to achieve rated capacity and efficiency. Installation of this product should follow all manufacturing refrigerant charging and air flow instructions. **Failure to confirm proper charge and air flow may reduce energy efficiency and shorten equipment life.**

STANDARD FEATURES

Feature	18	24	30	36	42	48	60
Puron Refrigerant	X	X	X	X	X	X	X
Maximum SEER Rating*	15.3	15.3	15.3	15.3	15.0	15.0	15.0
Scroll Compressor	X	X	X	X	X	X	X
Field Installed Filter Drier	X	X	X	X	X	X	X
Front Seating Service Valves	X	X	X	X	X	X	X
Internal Pressure Relief Valve	X	X	X	X	X	X	X
Internal Thermal Overload	X	X	X	X	X	X	X
Long Line capability	X	X	X	X	X	X	X
Low Ambient cooling capability with Kit	X	X	X	X	X	X	X
Suction Line Accumulator	X	X	X	X	X	X	X
High Pressure Switch	X	X	X	X	X	X	X
Loss of Charge Switch	X	X	X	X	X	X	X
Dense Grille	X	X	X	X	X	X	X

X = Standard
* = Based on tested combination

PHYSICAL DATA

UNIT SIZE SERIES	18–30	24–30	30–30	36–30	42–30	48–30	60–30
Operating Weight lb (kg)	169 (76.7)	200 (90.8)	196 (88.9)	215 (97.5)	245 (111.1)	260 (117.9)	294 (113.4)
Shipping Weight lb (kg)	207 (93.9)	233 (105.7)	242 (109.8)	257 (116.6)	290 (131.5)	303 (137.4)	345 (156.5)
Compressor Type	Scroll						
REFRIGERANT	Puron (R–410A)						
Control	TXV (Puron Hard Shutoff)						
Charge lb (kg)	5.6 (2.54)	7.60 (3.45)	7.00 (3.18)	7.40 (3.34)	8.90 (4.04)	9.60 (4.35)	12.50 (5.67)
Outdoor Heating Piston #	42	46	52	61	61	67	76
COND FAN	Propeller Type, Direct Drive						
Air Discharge	Vertical						
Air Qty (CFM)	2233	3223	3223	3810	3810	4046	4046
Motor HP	1/12	1/12	1/12	1/5	1/5	1/4	1/4
Motor RPM	800	800	800	800	800	800	800
COND COIL							
Face Area (Sq ft)	15.09	20.12	20.12	22.63	17.60	17.60	25.15
Fins per In.	20	20	20	20	20	20	20
Rows	1	1	1	1	2	2	2
Circuits	4	5	5	6	7	7	9
VALVE CONNECT. (In. ID)							
Vapor	5/8	5/8	3/4	3/4	7/8	7/8	7/8
Liquid	3/8”						
REFRIGERANT TUBES (In. OD)							
Rated Vapor*	5/8	5/8	3/4	3/4	7/8	7/8	1 1/8
Liquid	3/8						

*Units are rated with 25 ft (7.6 m) of lineset length. See *Vapor Line Sizing and Cooling Capacity Loss* table when using other sizes and lengths of lineset.

Note: See unit Installation Instruction for proper installation.

25HBC5

VAPOR LINE SIZING AND COOLING CAPACITY LOSS

Acceptable vapor line diameters provide adequate oil return to the compressor while avoiding excessive capacity loss. The suction line diameters shown in the chart below are acceptable for HP systems with Puron refrigerant:

Vapor Line Sizing and Cooling Capacity Losses - Puron® Refrigerant 1- Stage Heat Pump Applications

Unit Nominal Size (Btuh)	Maximum Liquid Line Diameters (In. OD)	Vapor Line Diameters (In.) OD	Cooling Capacity Loss (%) Total Equivalent Line Length ft. (m)								
			Standard Application		Long Line Application Requires Accessories						
			26–50 (7.9–15.2)	51–80 (15.5–24.4)	81–100 (24.7–30.5)	101–125 (30.8–38.1)	126–150 (38.4–45.7)	151–175 (46.0–50.3)	176–200 (53.6–60.0)	201–225 (61.3–68.6)	226–250 (68.9–76.2)
18,000 1–Stage HP with Puron	3/8	1/2	1	2	3	4	6	7	8	9	10
		5/8	0	0	1	1	1	2	2	3	3
24,000 1–Stage HP with Puron	3/8	5/8	0	1	1	2	3	3	4	4	5
		3/4	0	0	0	0	1	1	1	1	1
30,000 1–Stage HP with Puron	3/8	5/8	1	2	3	3	4	5	6	7	8
		3/4	0	0	1	1	1	2	2	2	3
		7/8	0	0	0	0	1	1	1	1	1
36,000 1–Stage HP with Puron	3/8	5/8	1	2	4	5	6	7	9	10	11
		3/4	0	0	1	1	2	2	3	3	4
		7/8	0	0	0	0	1	1	1	1	2
42,000 1–Stage HP with Puron	3/8	3/4	0	1	2	2	3	4	4	5	6
		7/8	0	0	1	1	1	2	2	2	3
48,000 1–Stage HP with Puron	3/8	3/4	0	1	2	3	4	5	5	6	7
		7/8	0	0	1	1	2	2	2	3	3
60,000 1–Stage HP with Puron	3/8	3/4	1	2	4	5	6	7	9	10	11
		7/8	0	1	2	2	3	4	4	5	5
		1–1/8	0	0	0	1	1	1	1	1	1

Standard Length = 80 ft. (24.4 m) or less total equivalent length

Applications in this area are long line. Accessories are required as shown recommended on Long Line Application Guidelines

Applications in this area may have height restrictions that limit allowable total equivalent length, when outdoor unit is below indoor unit See Long Line Application Guidelines

REFRIGERANT PIPING LENGTH LIMITATIONS

Maximum Line Lengths:

The maximum allowable total equivalent length for heat pumps varies depending on the vertical separation. See the tables below for allowable lengths depending on whether the outdoor unit is on the same level, above or below the outdoor unit.

Maximum Line Lengths for Heat Pump Applications

	MAXIMUM ACTUAL LENGTH ft (m)	MAXIMUM EQUIVALENT LENGTH† ft (m)	MAXIMUM VERTICAL SEPARATION ft (m)
Units on equal level	200 (61)	250 (76.2)	N/A
Outdoor unit ABOVE indoor unit	200 (61)	250 (76.2)	200 (61)
Outdoor unit BELOW indoor unit	See Table *'Maximum Total Equivalent Length: Outdoor Unit BELOW Indoor Unit'*		

† Total equivalent length accounts for losses due to elbows or fitting. See the Long Line Guideline for details.

25HBC5

Maximum Total Equivalent Length† - Outdoor Unit BELOW Indoor Unit

Size	Liquid Line Diameter w/ TXV	HP with Puron® Refrigerant – Maximum Total Equivalent Length† Vertical Separation ft (m) Outdoor unit BELOW indoor unit;						
		0–20 (0 – 6.1)	21–30 (6.4 – 9.1)	31–40 (9.4 – 12.2)	41–50 (12.5 – 15.2)	51–60 (15.5 – 18.3)	61–70 (18.6 – 21.3)	71–80 (21.6 – 24.4)
18000 HP with Puron	3/8	250*	250*	250*	250*	250*	250*	250*
24000 HP with Puron	3/8	250*	250*	250*	250*	250*	250*	250*
30000 HP with Puron	3/8	250*	250*	250*	250*	250*	250*	250*
36000 HP with Puron	3/8	250*	250*	250*	250*	250*	250*	250*
42000 HP with Puron	3/8	250*	250*	250*	250*	250*	250*	150
48000 HP with Puron	3/8	250*	250*	250*	250*	230	160	– –
60000 HP with Puron	3/8	250*	225*	190	150	110	– –	– –

*** Maximum actual length not to exceed 200 ft (61 m)**

† Total equivalent length accounts for losses due to elbows or fitting. See the Long Line Guideline for details.

– – = outside acceptable range

LONG LINE APPLICATIONS

An application is considered Long Line when the refrigerant level in the system requires the use of accessories to maintain acceptable refrigerant management for systems reliability. Defining a system as long line depends on the liquid line diameter, actual length of the tubing, and vertical separation between the indoor and outdoor units.

For Heat Pump systems, the chart below shows when an application is considered Long Line. Beyond these lengths, long line accessories are required:

HP WITH PURON® REFRIGERANT LONG LINE DESCRIPTION ft (m)
Beyond these lengths, long line accessories are required

Liquid Line Size	Units On Same Level	Outdoor Below Indoor	Outdoor Above Indoor
3/8	80 (24.4)	20 (6.1) vertical or 80 (24.4) total	80 (24.4)

Note: See Long Line Guideline for details

ACCESSORIES

ORDER NUMBER	DESCRIPTION	18−30	24−30	30−30	36−30	42−30	48−30	60−30
HC32GE229	BALL BEARING MOTOR	X	X	X				
HC38GE228	BALL BEARING MOTOR				X	X		
HC40GE228	BALL BEARING MOTOR						X	X
KAACH1701AAA	CRANKCASE HTR	X	X	X				
KAACH1401AAA	CRANKCASE HTR				X			
KAACH1601AAA	CRANKCASE HTR					X		
KAACH1201AAA	CRANKCASE HTR						X	
STANDARD	CRANKCASE HTR							S
KSACY0101AAA	CYCLE PROTECTOR	X	X	X	X	X	X	X
KAAFT0101AAA	FREEZE THERMOSTAT	X	X	X	X	X	X	X
KSAHS1701AAA	HARD START	X	X	X	X	X	X	X
KHAIR0101AAA	ISOLATION RELAY	X	X	X	X	X	X	X
KSALA0301410	LOW AMBIENT PSW	X	X	X	X	X	X	X
KSALA0601AAA†	MOTORMASTER 230V	X	X	X	X	X	X	X
KHAOT0201SEC	OUTDOOR THERMOSTAT	X	X	X	X	X	X	X
KHAOT0301FST	OUTDOOR THERMOSTAT	X	X	X	X	X	X	X
KHALS0401LLS	SOLENOID VALVE	X	X	X	X	X	X	X
KHASS0606MPK*	SNOW STAND RACK		X	X	X	X	X	X
KSASH0601COP	SOUND BLKT	X	X	X	X	X	X	
KSASH2101COP	SOUND BLKT							X
KAACS0201PTC	START ASSIST PTC	X	X	X	X	X	X	X
KSASF0101AAA	SUPPORT FEET	X	X	X	X	X	X	X
KAATD0101TDR	TIME DELAY RELAY	X	X	X	X	X	X	X
KSATX0201PUR	TXV PURON HSO	X	X	X				
KSATX0301PUR	TXV PURON HSO				X	X		
KSATX0401PUR	TXV PURON HSO						X	
KSATX0501PUR	TXV PURON HSO							X

x = Accessory S = Standard

* Available through RCD.

† Required accessories include ball bearing fan motor, compressor start assist (CAP / Relay), crankcase heater, evaporator freeze stat, isolation relay, hard shut−off TXV or liquid line solenoid valve.

ACCESSORY THERMOSTATS

PART NUMBER	PROGRAM	GAS	ELECTRIC	HEAT PUMP	HEAT	COOL
TC−PHP01	5−2 Day		√	√	3	2
TC−NHP01	NP		√	√	3	2
TCSNHP01	NP		√	√	2	1
TB−PHP01	5−2 Day	√	√	√	2	1
TB−NHP01	NP	√	√	√	2	1

THERMOSTAT ACCESSORIES		
PART NUMBER	BRIEF DESCRIPTION	THERMOSTATS USED WITH
TSTATXXCNV10‡	Thermostat Conversion Kit (4 to 5 wire) − 10 pack	All Carrier® branded thermostats
TX−LBP01	Large Decorative Backplate	TP−Pxx, TP−Nxx, TC−Pxx
TX−MBP01	Medium Decorative Backplate	TC−Nxx, TB−Pxx
TX−SBP01	Small Decorative Backplate	TB−Nxx

ACCESSORY USAGE GUIDELINE

Accessory	REQUIRED FOR LOW–AMBIENT COOLING APPLICATIONS (Below 55°F / 12.8°C)	REQUIRED FOR LONG LINE APPLICATIONS* (Over 80 ft. / 24.38 m)	REQUIRED FOR SEA COAST APPLICATIONS (Within 2 miles / 3.22 km)
Accumulator	Standard	Standard	Standard
Ball Bearing Fan Motor	Yes†	No	No
Compressor Start Assist Capacitor and Relay	Yes	Yes	No
Crankcase Heater	Yes	Yes	No
Evaporator Freeze Thermostat	Yes	No	No
Hard Shutoff TXV	Yes	Yes	Yes
Isolation Relay	Yes	No	No
Liquid Line Solenoid Valve	No	See Long–Line Application Guideline	No
Motor Master® Control or Low Ambient Switch	Yes	No	No
Support Feet	Recommended	No	Recommended

* For tubing line sets between 80 and 200 ft. (24.38 and 60 96 m) and/or 20 ft. (6.09 m) vertical differential, refer to Residential Split–System Longline Application Guideline.

† Additional requirement for Low–Ambient Controller (full modulation feature) MotorMaster® Control.

25HBC5

Accessory Description and Usage (Listed Alphabetically)

1. Ball-Bearing Fan Motor

A fan motor with ball bearings which permits speed reduction while maintaining bearing lubrication.

Usage Guideline:

Required on all units when using MotorMaster®

2. Compressor Start Assist - Capacitor and Relay

Start capacitor and relay gives a ”hard” boost to compressor motor at each start up.

Usage Guideline:

Required for reciprocating compressors in the following applications:

Long line

Low ambient cooling

Hard shut off expansion valve on indoor coil

Liquid line solenoid on indoor coil

Required for single-phase scroll compressors in the following applications:

Long line

Low ambient cooling

Suggested for all compressors in areas with a history of low voltage problems.

3. Compressor Start Assist — PTC Type

Solid state electrical device which gives a ”soft” boost to the compressor at each start-up.

Usage Guideline:

Suggested in installations with marginal power supply.

4. Crankcase Heater

An electric resistance heater which mounts to the base of the compressor to keep the lubricant warm during off cycles. Improves compressor lubrication on restart and minimizes the chance of liquid slugging.

Usage Guideline:

Required in low ambient cooling applications.

Required in long line applications.

Suggested in all commercial applications.

5. Evaporator Freeze Thermostat

An SPST temperature-actuated switch that stops unit operation when evaporator reaches freeze-up conditions.

Usage Guideline:

Required when low ambient kit has been added.

6. Isolation Relay

An SPDT relay which switches the low-ambient controller out of the outdoor fan motor circuit when the heat pump switches to heating mode.

Usage Guideline:

Required in all heat pumps where low ambient kit has been added.

7. Liquid-Line Solenoid Valve (LLS)

An electrically operated shutoff valve which stops and starts refrigerant liquid flow in response to compressor operation. It is to be installed at the outdoor unit to control refrigerant off cycle migration in the heating mode.

Usage Guideline:

An LLS is required in all long line heat pump applications to control refrigerant off cycle migration in the heating mode. See Long Line Guideline.

8. Low-Ambient Pressure Switch Kit

A long life pressure switch which is mounted to outdoor unit service valve. It is designed to cycle the outdoor fan motor in order to maintain head pressure within normal operating limits. The control will maintain working head pressure at low-ambient temperatures down to 0°F (-17.8°C) when properly installed.

Usage Guideline:

A Low-Ambient Pressure Switch or MotorMaster® Low-Ambient Controller must be used when cooling operation is used at outdoor temperatures below 55°F (12.8°C).

9. MotorMaster® Low-Ambient Controller

A fan-speed control device activated by a temperature sensor, designed to control condenser fan motor speed in response to the saturated, condensing temperature during operation in cooling mode only. For outdoor temperatures down to -20°F (-28.9°C), it maintains condensing temperature at 100°F ±10°F (37.8°C ± 6.5°C).

Usage Guideline:

A MotorMaster® Low Ambient Controller or Low-Ambient Pressure Switch must be used when cooling operation is used at outdoor temperatures below 55°F (12.8°C).

Suggested for all commercial applications.

10. Outdoor Air Temperature Sensor

Designed for use with Carrier Thermostats listed in this publication. This device enables the thermostat to display the outdoor temperature. This device also is required to enable special thermostat features such as auxiliary heat lock out.

Usage Guideline:

Suggested for all Carrier thermostats listed in this publication.

11. Outdoor Thermostat

An SPDT temperature-actuated switch which turns on supplemental electric heaters when outdoor air temperature drops below a user-selected set point.

Usage Guideline:

Electric supplemental heat applications in non-variable speed indoor units when electric heat staging is desired.

12. Secondary Outdoor Thermostat

An SPDT temperature-actuated switch which turns on third-stage of supplemental electric heaters when outdoor air temperature drops below the second-stage set point.

Usage Guideline:

Outdoor thermostat applications where electric heater is capable of 3-stage operation.

13. Snow Stand

Coated wire rack which supports unit 18 in. (457.2 mm) above mounting pad to allow for drainage from unit base.

Usage Guideline:

Suggested in the following applications:

Heat pump installations in heavy snowfall areas.

Heat pump installations in snow drift locations.

Heat pump installations in areas of prolonged subfreezing temperatures.

All commercial installations.

Note: Snow stand does not support 26” X 26” (660 X 660 mm) small basepan size.

14. Sound Hood

Wraparound sound reducing cover for the compressor. Reduces the sound level by about 2 dBA.

Usage Guideline:

Suggested when unit is installed closer than 15 ft. (4.577 m) to quiet areas, bedrooms, etc.

Suggested when unit is installed between two houses less than 10 ft. (3.05 m) apart.

15. Thermostatic Expansion Valve (TXV) Bi-Flow

A modulating flow-control valve which meters refrigerant liquid flow rate into the evaporator in response to the superheat of the refrigerant gas leaving the evaporator.

Usage Guideline:

Accessory required to meet AHRI rating and system reliability, where indoor not equipped.

Required in all heat pump applications designed with Puron refrigerant.

16. Time-Delay Relay

An SPST delay relay which briefly continues operation of indoor blower motor to provide additional cooling after the compressor cycles off.

Note: Most indoor unit controls include this feature. For those that do not, use the guideline below.

Usage Guideline:

Accessory required to meet AHRI rating, where indoor not equipped.

ELECTRICAL DATA

UNIT SIZE	V/PH	OPER VOLTS*		COMPR		FAN	MCA	MIN WIRE SIZE†		MAX LENGTH ft (m))‡		MAX FUSE** or BRK AMPS
		MAX	MIN	LRA	RLA	FLA		60° C	75° C	60° C	75° C	
18–30	208/230/1	253	197	48.0	9.0	0 5	11 8	14	14	67 (20.4)	63 (19.2)	20
24–30				58.3	12.8	0 5	16 5	14	14	48 (14 6)	45 (13.7)	25
30–30				73.0	14.1	0 5	18.1	14	14	44 (13.4)	41 (12.5)	30
36–30				79.0	16.7	1 2	22.1	12	12	57 (17.4)	54 (16.5)	35
42–30				109 0	21.1	1 2	27 6	10	10	72 (21 9)	69 (21.0)	40
48–30				117 0	21.8	1 2	28 5	10	10	70 (21 3)	67 (20.4)	40
60–30				134 0	26.4	1 2	34 2	8	10	91 (27 7)	56 (17.1)	50

* Permissible limits of the voltage range at which the unit will operate satisfactorily

† If wire is applied at ambient greater than 30°C, consult table 310–16 of the NEC (NFPA 70). The ampacity of non–metallic–sheathed cable (NM), trade name ROMEX, shall be that of 60°C conditions, per the NEC (NFPA 70) Article 336–26. If other than uncoated (no–plated), 60 or 75°C insulation, copper wire (solid wire for 10 AWG or smaller, stranded wire for larger than 10 AWG) is used, consult applicable tables of the NEC (NFPA 70).

‡ Length shown is as measured 1 way along wire path between unit and service panel for voltage drop not to exceed 2%.

** Time–Delay fuse.

FLA – Full Load Amps

LRA – Locked Rotor Amps

MCA – Minimum Circuit Amps

RLA – Rated Load Amps

NOTE: Control circuit is 24–V on all units and requires external power source. Copper wire must be used from service disconnect to unit.

All motors/compressors contain internal overload protection.

Complies with 2007 requirements of ASHRAE Standards 90.1

A-WEIGHTED SOUND POWER (dBA)

UNIT SIZE	STANDARD RATING dBA	TYPICAL OCTAVE BAND SPECTRUM (dBA, without tone adjustment)						
		125	250	500	1000	2000	4000	8000
18–30	73	49.5	60.0	65.0	69.0	65 5	62.0	55.0
24–30	69	48.5	59.5	61.5	62.5	61 0	59.0	53.5
30–30	71	51.0	58.5	61.5	65.5	62 5	60.0	53.5
36–30	72	55.5	59.5	63.5	66.5	64 5	61.5	55.5
42–30	74	56.5	64.0	67.0	68.5	65 0	62.0	57.5
48–30	74	55.5	62.0	66.0	69.0	65 0	62.0	56.0
60–30	74	59.0	62.0	65.0	68.0	65 0	62.5	62.0

NOTE: Tested in accordance with AHRI Standard 270–08 (not listed in AHRI).

A-WEIGHTED SOUND POWER (dBA) WITH SOUND SHIELD

UNIT SIZE	STANDARD RATING dBA	TYPICAL OCTAVE BAND SPECTRUM (dBA, without tone adjustment)						
		125	250	500	1000	2000	4000	8000
18–30	72	50.5	60.0	65.0	67.5	64 5	61.5	53.5
24–30	68	49.5	58.5	61.5	62.0	61 0	58.5	51.5
30–30	69	50.5	58.5	61.5	64.0	61 5	58.5	51.5
36–30	70	54.5	57.5	63.0	66.0	64 0	61.0	54.0
42–30	72	56.5	64.5	66.5	66.5	64 5	61.0	54.5
48–30	72	55.5	62.5	66.0	68.0	64 0	60.0	53.0
60–30	73	58.5	62.5	65.0	67.0	64 0	61.0	56.5

NOTE: Tested in accordance with AHRI Standard 270–08 (not listed in AHRI).

CHARGING SUBCOOLING (TXV-TYPE EXPANSION DEVICE)

UNIT SIZE–SERIES	REQUIRED SUBCOOLING °F (°C)
18–30	12 (6.7)
24–30	14 (7.8)
30–30	10 (5.6)
36–30	8 (4.4)
42–30	10 (5.6)
48–30	11 (6.1)
60–30	10 (5.6)

DIMENSIONS – ENGLISH

UNIT	SERIES	ELECTRICAL CHARACTERISTICS				A	B	C	D	E	F	G	K	L	M	N	P	OPERATING WEIGHT (lbs)	SHIPPING WEIGHT (lbs)	SHIPPING DIMENSIONS (L x W x H)
25HBC518	0	X	O	O	O	31 3/16"	28 15/16"	3 3/4"	5/8"	6 9/16"	24 11/16"	9 1/8"	2 13/16"	1/2"	16"	15"	14"	169	207	32 5/16" X 35 1/2" X 32 9/16"
25HBC524	0	X	O	O	O	35"	32 5/16"	3 3/4"	5/8"	6 9/16"	28 7/16"	9 1/8"	2 13/16"	1/2"	15 3/4"	16 3/4"	16 1/2"	200	233	36 1/8" X 39 1/4" X 35 15/16"
25HBC530	0	X	O	O	O	35"	32 5/16"	3 3/4"	3/4"	6 9/16"	28 7/16"	9 1/8"	2 13/16"	1/2"	16 1/4"	16"	15 1/2"	196	242	36 1/8" X 39 1/4" X 35 15/16"
25HBC536	0	X	O	O	O	35"	35 3/4"	3 3/4"	3/4"	6 9/16"	28 7/16"	9 1/8"	2 13/16"	1/2"	15 3/4"	16 3/4"	17"	215	257	36 1/8" X 39 1/4" X 39 3/8"
25HBC542	0	X	O	O	O	35"	28 15/16"	3 7/8"	7/8"	6 9/16"	28 7/16"	9 1/8"	2 15/16"	5/8"	17"	16 3/4"	14 3/4"	245	290	36 1/8" X 39 1/4" X 32 9/16"
25HBC548	0	X	O	O	O	35"	28 15/16"	3 7/8"	7/8"	6 9/16"	28 7/16"	9 1/8"	2 15/16"	5/8"	16 3/4"	16 1/4"	14"	260	303	36 1/8" X 39 1/4" X 32 9/16"
25HBC560	0	X	O	O	O	35"	39 1/8"	3 7/8"	7/8"	6 9/16"	28 7/16"	9 1/8"	2 15/16"	5/8"	17 1/4"	16 1/4"	18 1/4"	294	345	36 1/8" X 39 1/4" X 42 3/4"
		208-230-1-60	230-1-60	208/230-3-60	460-3-60															

X = YES
O = NO

NOTES:

1. ALLOW 30" CLEARANCE TO SERVICE SIDE OF UNIT, 48" ABOVE UNIT, 6" ON ONE SIDE, 12" ON REMAINING SIDE, AND 24" BETWEEN UNITS FOR PROPER AIRFLOW.
2. MINIMUM OUTDOOR OPERATING AMBIENT IN COOLING MODE IS 55°F, MAX. 125°F.
3. SERIES DESIGNATION IS THE 13TH POSITION OF THE UNIT MODEL NUMBER.
4. CENTER OF GRAVITY ⊕.
5. ALL DIMENSIONS ARE IN "INCHES" UNLESS NOTED.

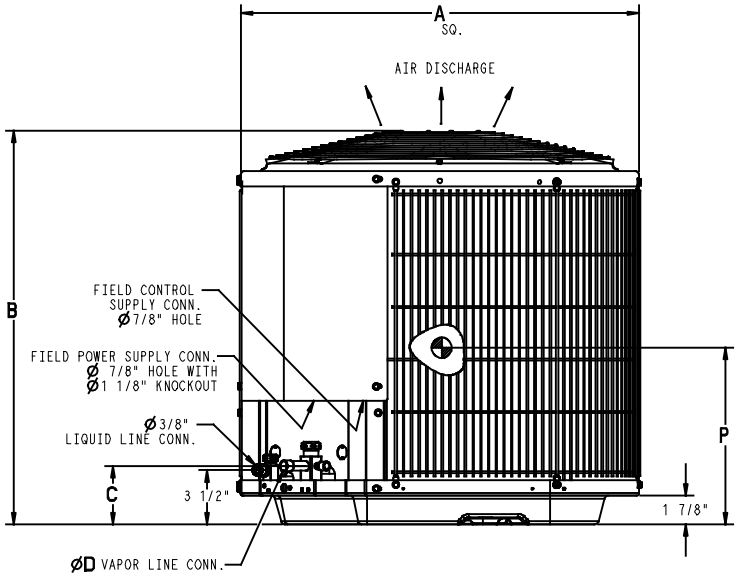

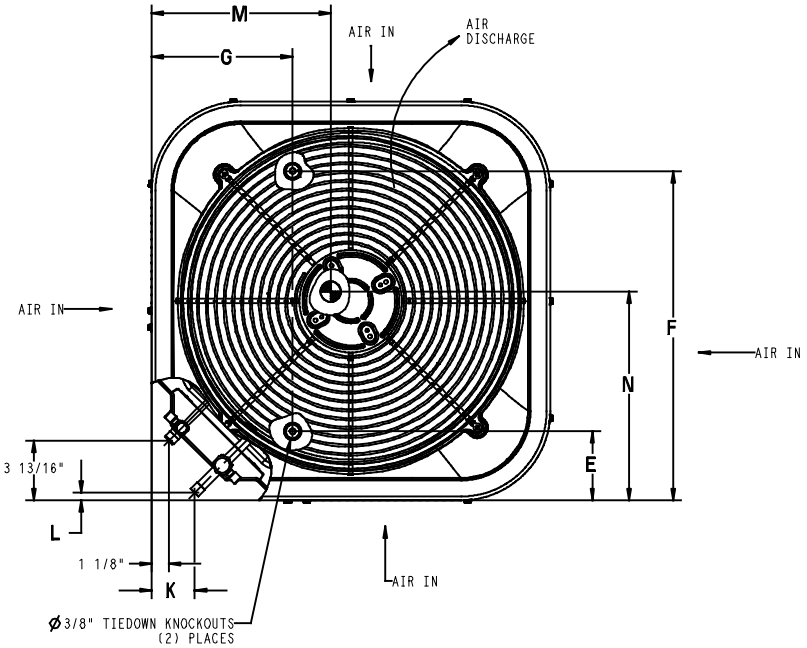

UNIT SIZE	MINIMUM MOUNTING PAD DIMENSIONS
-	26" X 26"
18	31 1/2" X 31 1/2"
24,30,36,42,48,60	35" X 35"

DIMENSIONS – SI

UNIT	SERIES	ELECTRICAL CHARACTERISTICS				A	B	C	D	E	F	G	K	L	M	N	P	OPERATING WEIGHT (Kgs)	SHIPPING WEIGHT (Kgs)	SHIPPING DIMENSIONS (L x W x H)
25HBC518	0	X	O	O	O	792.5	734.8	95.6	15.9	166.1	626.3	231.3	70.9	12.8	406.4	381.0	355.6	76.7	93.9	821.2 X 901.2 X 826.8
25HBC524	0	X	O	O	O	889.0	821.2	95.6	15.9	166.1	722.8	231.3	70.9	12.8	400.1	425.5	419.1	90.8	105.7	917.7 X 997.7 X 913.2
25HBC530	0	X	O	O	O	889.0	821.2	95.6	19.1	166.1	722.8	231.3	70.9	12.8	412.8	406.4	393.7	88.9	109.8	917.7 X 997.7 X 913.2
25HBC536	0	X	O	O	O	889.0	907.5	95.6	19.1	166.1	722.8	231.3	70.9	12.8	400.1	425.5	431.8	97.5	116.6	917.7 X 997.7 X 999.5
25HBC542	0	X	O	O	O	889.0	734.8	97.9	22.2	166.1	722.8	231.3	74.5	16.3	431.8	425.5	374.7	111.1	131.5	917.7 X 997.7 X 826.8
25HBC548	0	X	O	O	O	889.0	734.8	97.9	22.2	166.1	722.8	231.3	74.5	16.3	425.5	412.8	355.6	117.9	137.4	917.7 X 997.7 X 826.8
25HBC560	0	X	O	O	O	889.0	993.9	97.9	22.2	166.1	722.8	231.3	74.5	16.3	438.2	412.8	463.6	113.4	156.5	917.7 X 997.7 X 1085.9
		208-230-1-60	230-1-60	208/230-3-60	460-3-60															

X = YES
O = NO

NOTES:

1. ALLOW 762.0 CLEARANCE TO SERVICE SIDE OF UNIT, 1219.2 ABOVE UNIT, 152.4 ON ONE SIDE, 304.8 ON REMAINING SIDE, AND 609.6 BETWEEN UNITS FOR PROPER AIRFLOW.
2. MINIMUM OUTDOOR OPERATING AMBIENT IN COOLING MODE IS 13°C, MAX. 52°C.
3. SERIES DESIGNATION IS THE 13TH POSITION OF THE UNIT MODEL NUMBER.
4. CENTER OF GRAVITY ⊕.
5. ALL DIMENSIONS ARE IN "MM" UNLESS NOTED.

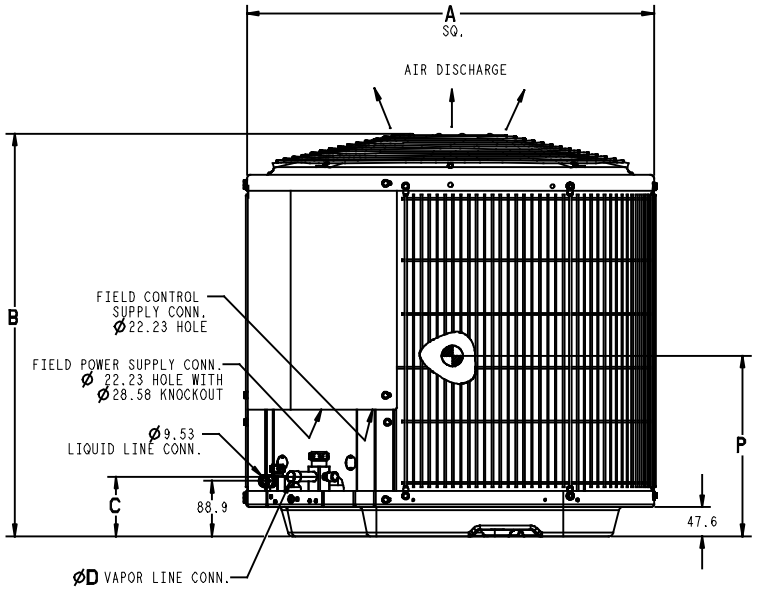

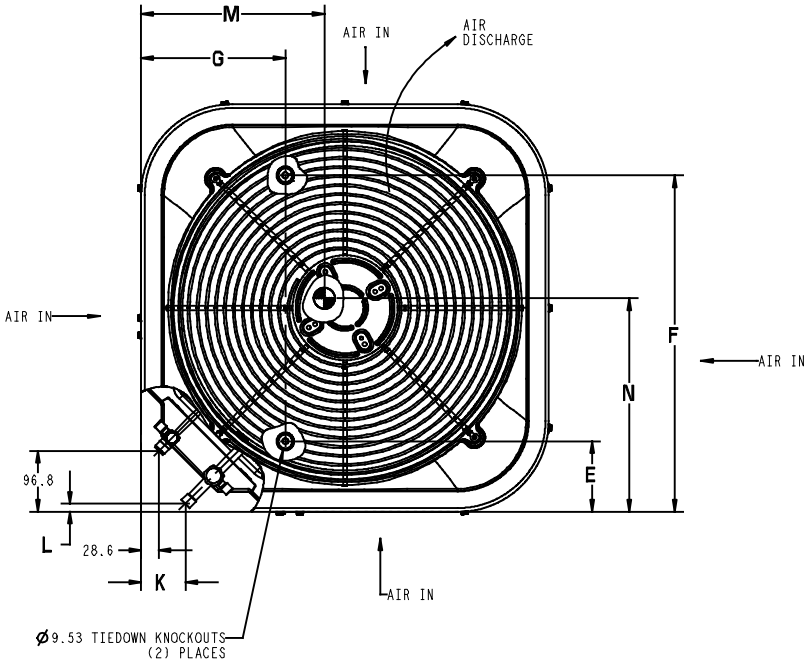

UNIT SIZE	MINIMUM MOUNTING PAD DIMENSIONS
-	660.4 X 660.4
18	800.1 X 800.1
24,30,36,42,48,60	889.0 X 889.0

25HBC5 BALANCE POINT WORKSHEET

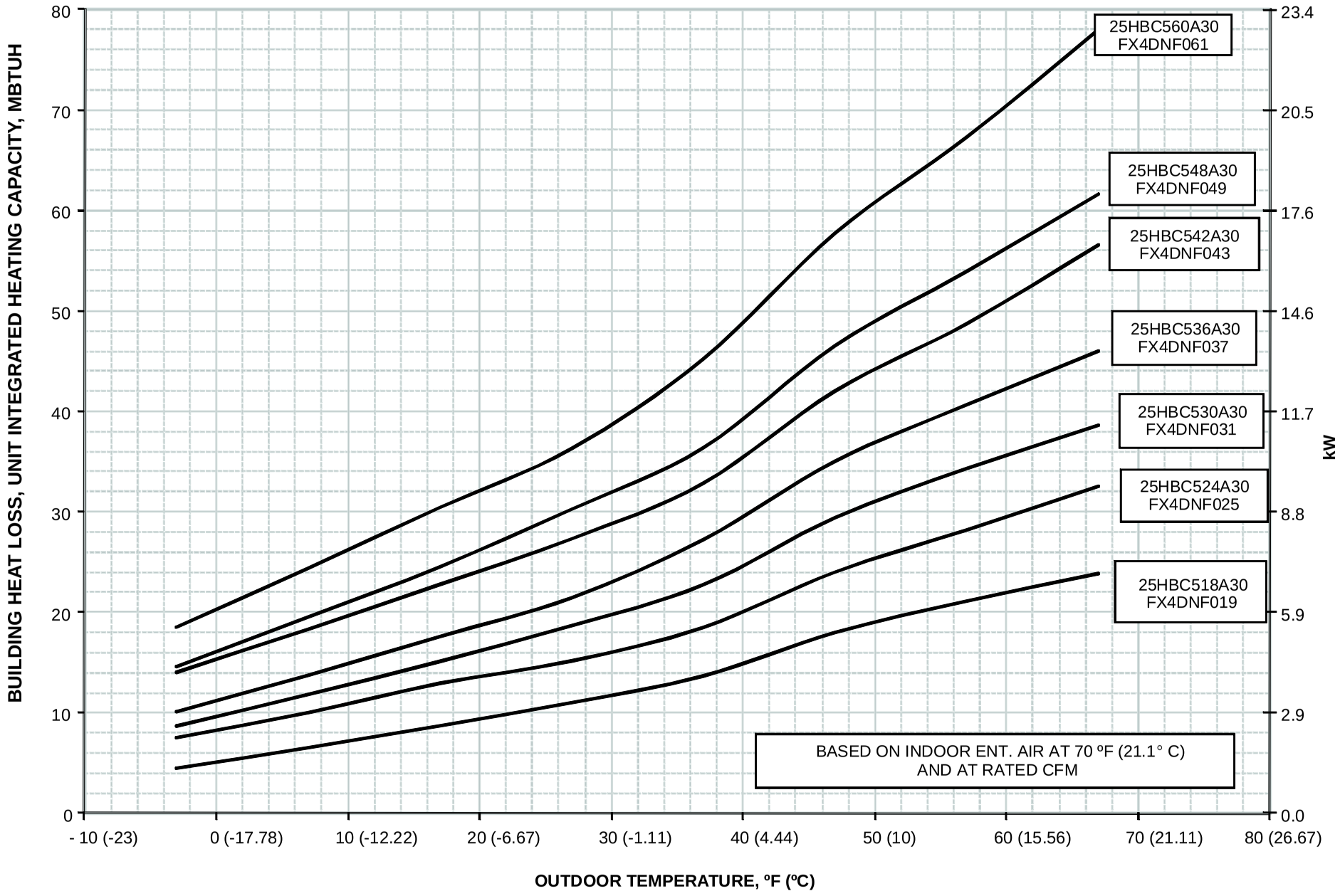

CLEARANCES

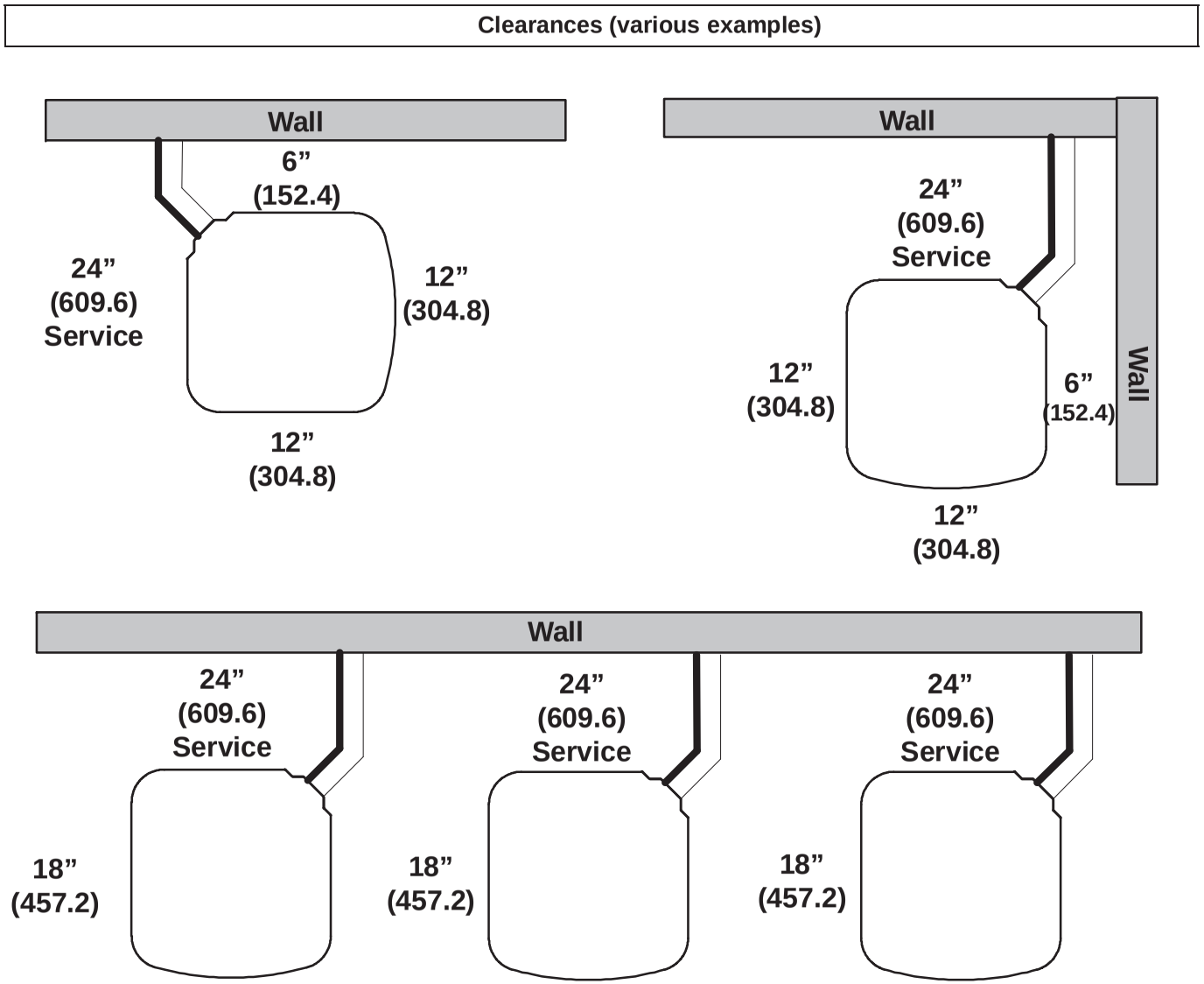

Note: Numbers in ( ) = mm

IMPORTANT: When installing multiple units in an alcove, roof well, or partially enclosed area, ensure there is adequate ventilation to prevent re-circulation of discharge air.

COMBINATION RATINGS

AHRI Ref. No.	Model Number	Coil Model Number	Furnace Model Number	Cooling Capacity	EER	SEER	High Temp		HSPF	Low Temp	
							E Capacity	E COP		H Capacity	H COP
3645439	25HBC518A**30	†FX4DNF019		17,800	12.6	15.3	17,800	3 92	8.6	10,700	2.60
3645382	25HBC518A**30	CAP**1814A**	58CV(A,X)070−12	17,200	12.0	14.5	17,500	3 58	7.9	10,400	2.46
3645412	25HBC518A**30	CAP**1814A**	58PH*045−08	17,400	12.0	14.5	17,800	3 68	8.2	10,600	2.50
4804510	25HBC518A**30	CAP**1814A**	59*P5A040E14**10	17,200	11.5	14.0	17,600	3 52	7.8	10,500	2.42
3645418	25HBC518A**30	CAP**1814A**+TDR		17,200	11.2	13.0	18,000	3 52	8.0	11,200	2.38
3645383	25HBC518A**30	CAP**2414A**	58CV(A,X)070−12	17,400	12.5	15.0	17,700	3.70	8.1	10,500	2.50
3645413	25HBC518A**30	CAP**2414A**	58PH*045−08	17,600	12.5	15.0	18,000	3 84	8.5	10,700	2.56
4804511	25HBC518A**30	CAP**2414A**	59*P5A040E14**10	17,600	11.8	14.2	17,800	3 64	8.2	10,600	2.46
3645419	25HBC518A**30	CAP**2414A**+TDR		17,400	11.2	13.5	18,000	3 62	8.2	11,200	2.42
3645388	25HBC518A**30	CAP**2417A**	58CV(A,X)090−16	17,400	12.5	15.0	17,700	3.74	8.1	10,500	2.52
3645393	25HBC518A**30	CAP**2417A**	58ME(B,C)040−12	18,000	13.0	15.5	18,000	4 00	8.7	10,700	2.64
3645398	25HBC518A**30	CAP**2417A**	58ME(B,C)060−12	17,800	13.0	15.5	18,000	3 92	8.5	10,600	2.60
3646395	25HBC518A**30	CAP**2417A**	58MEB040−12	18,000	13.0	15.5	18,000	4 00	8.7	10,700	2.64
3645403	25HBC518A**30	CAP**2417A**	58MV(B,C)060−14	17,400	12.5	15.0	17,700	3.72	8.1	10,500	2.52
3645443	25HBC518A**30	CAP**2417A**	58UVB060−14	17,400	12.5	15.0	17,700	3.72	8.1	10,500	2.52
3810449	25HBC518A**30	CAP**2417A**	58VLR105−12	18,000	12.5	15.5	18,000	3 92	8.5	10,700	2.60
3810448	25HBC518A**30	CAP**2417A**	58VMR105−12	17,800	12.5	15.0	17,800	3.76	8.5	10,500	2.54
4804512	25HBC518A**30	CAP**2417A**	59*N*A060V17**14	17,600	12.0	14.5	17,700	3.70	8.2	10,500	2.50
4804513	25HBC518A**30	CAP**2417A**	59*N*A080V17**14	17,600	12.0	14.5	17,600	3 68	8.2	10,400	2.50
4804514	25HBC518A**30	CAP**2417A**	59*P5A040E14**10	17,600	12.0	14.5	17,800	3 66	8.2	10,600	2.48
4194126	25HBC518A**30	CAP**2417A**	OVLAAB036098	18,000	12.5	15.0	18,000	3 84	8.5	10,700	2.56
4194125	25HBC518A**30	CAP**2417A**	OVMAAB036098	18,000	12.5	15.0	18,000	3 90	8.5	10,800	2.58
3645420	25HBC518A**30	CAP**2417A**+TDR		17,400	11.2	13.5	18,000	3 62	8.2	11,200	2.42
3645384	25HBC518A**30	CNPH*2417A**	58CV(A,X)070−12	17,300	12.5	15.0	17,700	3.74	8.1	10,500	2.52
3645389	25HBC518A**30	CNPH*2417A**	58CV(A,X)090−16	17,400	12.5	15.0	17,700	3.76	8.1	10,500	2.52
3756321	25HBC518A**30	CNPH*2417A**	58HDV040−−12	18,000	12.2	14.5	18,000	3 96	8.5	11,000	2.58
3756322	25HBC518A**30	CNPH*2417A**	58HDV060−−12	18,000	12.2	14.5	18,000	3 96	8.6	11,000	2.58
3645394	25HBC518A**30	CNPH*2417A**	58ME(B,C)040−12	17,800	12.5	15.5	18,000	3 96	8.7	10,700	2.60
3645399	25HBC518A**30	CNPH*2417A**	58ME(B,C)060−12	17,600	12.5	15.5	17,900	3 86	8.5	10,600	2.56
3646396	25HBC518A**30	CNPH*2417A**	58MEB040−12	17,800	12.5	15.5	18,000	3 96	8.7	10,700	2.60
3645404	25HBC518A**30	CNPH*2417A**	58MV(B,C)060−14	17,400	12.5	15.0	17,700	3.76	8.1	10,500	2.52
3645408	25HBC518A**30	CNPH*2417A**	58MV(B,C)080−14	17,300	12.5	15.0	17,700	3.74	8.1	10,500	2.52
3645410	25HBC518A**30	CNPH*2417A**	58MVB040−14	17,400	12.5	15.0	17,700	3.74	8.2	10,500	2.52
3645414	25HBC518A**30	CNPH*2417A**	58PH*045−08	17,600	12.5	15.0	18,000	3 84	8.5	10,700	2.56
3810455	25HBC518A**30	CNPH*2417A**	58VLR105−12	18,000	12.5	15.5	18,000	3 94	8.5	10,700	2.60
3810454	25HBC518A**30	CNPH*2417A**	58VMR105−12	17,800	12.5	15.0	17,800	3 80	8.5	10,600	2.54
4804523	25HBC518A**30	CNPH*2417A**	59*N*A060V17**14	17,700	12.0	14.5	17,800	3.72	8.2	10,500	2.50
4804524	25HBC518A**30	CNPH*2417A**	59*N*A080V17**14	17,600	12.0	14.5	17,700	3.70	8.2	10,500	2.50
4804525	25HBC518A**30	CNPH*2417A**	59*P5A040E14**10	17,500	11.8	14.2	17,800	3 66	8.2	10,600	2.46
4194133	25HBC518A**30	CNPH*2417A**	OVLAAB036098	18,000	12.5	15.0	18,000	3 88	8.6	10,700	2.56
4194132	25HBC518A**30	CNPH*2417A**	OVMAAB036098	18,000	12.5	15.0	18,000	3 92	8.7	10,800	2.58
3645422	25HBC518A**30	CNPH*2417A**+TDR		17,400	11.2	13.5	18,000	3 66	8.2	11,300	2.42
3645385	25HBC518A**30	CNPV*1814A**	58CV(A,X)070−12	17,200	12.0	14.5	17,500	3 68	7.9	10,500	2.48
3645415	25HBC518A**30	CNPV*1814A**	58PH*045−08	17,400	12.0	14.5	17,800	3.74	8.1	10,600	2.52
4804515	25HBC518A**30	CNPV*1814A**	59*P5A040E14**10	17,300	11.8	14.2	17,700	3 56	8.0	10,500	2.42
3645423	25HBC518A**30	CNPV*1814A**+TDR		17,200	11.2	13.0	18,000	3 62	8.0	11,200	2.40
3645390	25HBC518A**30	CNPV*1917A**	58CV(A,X)090−16	17,600	12.5	15.0	17,800	3 80	8.5	10,500	2.54
3645395	25HBC518A**30	CNPV*1917A**	58ME(B,C)040−12	18,000	13.0	15.5	18,000	4 08	8.8	10,800	2.66
3645400	25HBC518A**30	CNPV*1917A**	58ME(B,C)060−12	18,000	13.0	15.5	18,000	3 98	8.6	10,700	2.62
3646397	25HBC518A**30	CNPV*1917A**	58MEB040−12	18,000	13.0	15.5	18,000	4 08	8.8	10,800	2.66
3645405	25HBC518A**30	CNPV*1917A**	58MV(B,C)060−14	17,500	12.5	15.0	17,800	3.78	8.5	10,500	2.54
3645444	25HBC518A**30	CNPV*1917A**	58UVB060−14	17,500	12.5	15.0	17,800	3.78	8.5	10,500	2.54
3810451	25HBC518A**30	CNPV*1917A**	58VLR105−12	18,000	12.5	15.5	18,000	4 00	8.5	10,700	2.62
3810450	25HBC518A**30	CNPV*1917A**	58VMR105−12	17,900	12.5	15.0	17,900	3 86	8.5	10,600	2.56
4804516	25HBC518A**30	CNPV*1917A**	59*N*A060V17**14	17,800	12.0	14.5	17,800	3.78	8.2	10,600	2.52
4804517	25HBC518A**30	CNPV*1917A**	59*N*A080V17**14	17,700	12.5	15.0	17,700	3.76	8.2	10,500	2.52
4804518	25HBC518A**30	CNPV*1917A**	59*P5A040E14**10	17,700	12.0	14.5	17,900	3.74	8.2	10,700	2.50
4194129	25HBC518A**30	CNPV*1917A**	OVLAAB036098	18,000	12.5	15.0	18,000	3 94	8.7	10,700	2.60
4194128	25HBC518A**30	CNPV*1917A**	OVMAAB036098	18,000	12.5	15.0	18,000	4 00	8.8	10,800	2.60
3645424	25HBC518A**30	CNPV*1917A**+TDR		17,600	11.5	13.0	18,000	3 68	8.2	11,300	2.44
3645386	25HBC518A**30	CNPV*2414A**	58CV(A,X)070−12	17,400	12.5	15.0	17,700	3.74	8.1	10,500	2.52
3645416	25HBC518A**30	CNPV*2414A**	58PH*045−08	17,600	12.5	15.0	18,000	3 84	8.5	10,700	2.56
4804519	25HBC518A**30	CNPV*2414A**	59*P5A040E14**10	17,500	11.8	14.2	17,800	3 66	8.2	10,600	2.46
3645425	25HBC518A**30	CNPV*2414A**+TDR		17,400	11.2	13.5	18,000	3 66	8.2	11,300	2.42
3645391	25HBC518A**30	CNPV*2417A**	58CV(A,X)090−16	17,400	12.5	15.0	17,700	3.76	8.1	10,500	2.52
4194127	25HBC518A**30	CNPV*2417A**	58HDV040−−12	18,000	12.5	14.5	18,000	3 96	8.7	11,000	2.58
3645396	25HBC518A**30	CNPV*2417A**	58ME(B,C)040−12	17,800	12.5	15.5	18,000	3 96	8.7	10,700	2.60
3645401	25HBC518A**30	CNPV*2417A**	58ME(B,C)060−12	17,600	12.5	15.5	17,900	3 86	8.5	10,600	2.56
3646398	25HBC518A**30	CNPV*2417A**	58MEB040−12	17,800	12.5	15.5	18,000	3 96	8.7	10,700	2.60
3645406	25HBC518A**30	CNPV*2417A**	58MV(B,C)060−14	17,400	12.5	15.0	17,700	3.76	8.1	10,500	2.52
3645445	25HBC518A**30	CNPV*2417A**	58UVB060−14	17,400	12.5	15.0	17,700	3.76	8.1	10,500	2.52
3810453	25HBC518A**30	CNPV*2417A**	58VLR105−12	18,000	12.5	15.5	18,000	3 94	8.5	10,700	2.60
3810452	25HBC518A**30	CNPV*2417A**	58VMR105−12	17,800	12.5	15.0	17,800	3 80	8.5	10,600	2.54
4804520	25HBC518A**30	CNPV*2417A**	59*N*A060V17**14	17,700	12.0	14.5	17,800	3.72	8.2	10,500	2.50
4804521	25HBC518A**30	CNPV*2417A**	59*N*A080V17**14	17,600	12.0	14.5	17,700	3.70	8.2	10,500	2.50
4804522	25HBC518A**30	CNPV*2417A**	59*P5A040E14**10	17,500	11.8	14.2	17,800	3 66	8.2	10,600	2.46
4194131	25HBC518A**30	CNPV*2417A**	OVLAAB036098	18,000	12.5	15.0	18,000	3 88	8.6	10,700	2.56
4194130	25HBC518A**30	CNPV*2417A**	OVMAAB036098	18,000	12.5	15.0	18,000	3 92	8.7	10,800	2.58
3645426	25HBC518A**30	CNPV*2417A**+TDR		17,400	11.2	13.5	18,000	3 66	8.2	11,300	2.42
3645387	25HBC518A**30	CSPH*2412A**	58CV(A,X)070−12	17,400	12.5	15.0	17,700	3.72	8.1	10,500	2.52

See notes on page 36

COMBINATION RATINGS CONTINUED

AHRI Ref. No.	Model Number	Coil Model Number	Furnace Model Number	Cooling Capacity	EER	SEER	High Temp		HSPF	Low Temp	
							E Capacity	E COP		H Capacity	H COP
3645392	25HBC518A**30	CSPH*2412A**	58CV(A,X)090−16	17,400	12.5	15.0	17,700	3.76	8.1	10,500	2.52
3756323	25HBC518A**30	CSPH*2412A**	58HDV040−−12	18,000	12.2	14.5	18,000	3 94	8.5	11,000	2.58
3756324	25HBC518A**30	CSPH*2412A**	58HDV060−−12	18,000	12.2	14.5	18,000	3 94	8.5	11,000	2.58
3645397	25HBC518A**30	CSPH*2412A**	58ME(B,C)040−12	17,800	12.5	15.5	18,000	3 90	8.7	10,700	2.60
3645402	25HBC518A**30	CSPH*2412A**	58ME(B,C)060−12	17,600	12.5	15.5	17,700	3.78	8.2	10,500	2.54
3646399	25HBC518A**30	CSPH*2412A**	58MEB040−12	17,800	12.5	15.5	18,000	3 90	8.7	10,700	2.60
3645407	25HBC518A**30	CSPH*2412A**	58MV(B,C)060−14	17,400	12.5	15.0	17,700	3.74	8.1	10,500	2.52
3645409	25HBC518A**30	CSPH*2412A**	58MV(B,C)080−14	17,500	12.5	15.0	17,700	3.72	8.1	10,500	2.52
3645411	25HBC518A**30	CSPH*2412A**	58MVB040−14	17,500	12.5	15.0	17,700	3.74	8.2	10,500	2.52
3645417	25HBC518A**30	CSPH*2412A**	58PH*045−08	17,600	12.5	15.0	18,000	3 82	8.5	10,700	2.54
3810457	25HBC518A**30	CSPH*2412A**	58VLR105−12	18,000	12.5	15.5	18,000	3 94	8.5	10,700	2.60
3810456	25HBC518A**30	CSPH*2412A**	58VMR105−12	17,900	12.5	15.0	17,900	3.78	8.5	10,600	2.54
4804526	25HBC518A**30	CSPH*2412A**	59*N*A060V17**14	17,800	12.0	14.5	17,800	3.72	8.2	10,600	2.50
4804527	25HBC518A**30	CSPH*2412A**	59*N*A080V17**14	17,700	12.0	14.5	17,700	3.70	8.2	10,500	2.50
4804528	25HBC518A**30	CSPH*2412A**	59*P5A040E14**10	17,600	11.8	14.2	17,800	3 62	8.0	10,600	2.44
4194135	25HBC518A**30	CSPH*2412A**	OVLAAB036098	18,000	12.5	15.0	18,000	3 86	8.5	10,800	2.56
4194134	25HBC518A**30	CSPH*2412A**	OVMAAB036098	18,000	12.5	15.0	18,000	3 92	8.7	10,800	2.58
3645427	25HBC518A**30	CSPH*2412A**+TDR		17,400	11.2	13.5	18,000	3 68	8.2	11,300	2.44
3810444	25HBC518A**30	FB4CNF018		17,700	12.0	14.5	18,000	3.78	8.2	10,700	2.52
3645428	25HBC518A**30	FB4CNF018+TXV		17,600	12.5	15.0	18,000	3.78	8.2	10,700	2.52
3810445	25HBC518A**30	FB4CNF024		17,700	12.0	14.5	18,000	3.76	8.2	10,700	2.52
3645429	25HBC518A**30	FB4CNF024+TXV		17,500	12.5	15.0	18,000	3.78	8.2	10,700	2.52
3645430	25HBC518A**30	FE4ANF002+UI		17,700	13.0	15.5	17,800	3 84	8.5	10,500	2.56
3645431	25HBC518A**30	FF1ENP018		17,200	11.2	13.0	18,000	3 54	8.0	11,200	2.38
3645432	25HBC518A**30	FF1ENP019		17,500	12.0	14.5	18,000	3.76	8.2	10,700	2.52
3645433	25HBC518A**30	FF1ENP024		17,400	11.2	13.5	18,000	3 58	8.0	11,200	2.40
3645434	25HBC518A**30	FF1ENP025		17,800	12.5	15.0	18,000	3 86	8.5	10,700	2.58
3645436	25HBC518A**30	FV4CNF002		17,700	13.0	15.5	17,800	3 84	8.5	10,500	2.56
3645440	25HBC518A**30	FX4DNF025		18,000	12.6	15.5	18,000	3 90	8.6	10,700	2.58
3810446	25HBC518A**30	FY5BNF018		17,600	11.5	13.5	18,000	3 64	8.2	11,000	2.44
3692767	25HBC518A**30	FY5BNF018+TXV		17,400	11.5	14.0	18,000	3 64	8.2	11,000	2.44
3810447	25HBC518A**30	FY5BNF024		17,700	11.5	13.5	18,000	3 68	8.2	11,000	2.46
3692768	25HBC518A**30	FY5BNF024+TXV		17,400	11.5	14.0	18,000	3 64	8.2	11,000	2.44
3645571	25HBC524A**30	†FX4DNF025		24,000	12.5	15.3	24,000	3 96	8.7	14,700	2.68
3645446	25HBC524A**30	CAP**2414A**	58CV(A,X)070−12	23,400	12.5	15.0	24,000	3.78	8.5	14,100	2.58
3645533	25HBC524A**30	CAP**2414A**	58PH*045−08	23,400	12.5	15.0	24,000	3 84	8.5	14,500	2.64
4804529	25HBC524A**30	CAP**2414A**	59*P5A040E14**10	23,600	11.5	14.0	24,000	3.74	8.5	15,000	2.54
3645541	25HBC524A**30	CAP**2414A**+TDR		23,400	11.2	13.5	24,000	3.72	8.3	15,200	2.54
3645454	25HBC524A**30	CAP**2417A**	58CV(A,X)090−16	23,400	12.5	15.5	24,000	3 84	8.5	14,300	2.64
3645477	25HBC524A**30	CAP**2417A**	58ME(B,C)040−12	23,400	12.5	15.5	24,000	3 98	8.7	14,500	2.70
3645486	25HBC524A**30	CAP**2417A**	58ME(B,C)060−12	23,400	12.5	15.5	24,000	4 00	8.8	14,600	2.72
3645495	25HBC524A**30	CAP**2417A**	58ME(B,C)080−12	23,400	12.5	15.5	24,000	3 96	8.7	14,500	2.70
3646400	25HBC524A**30	CAP**2417A**	58MEB040−12	23,400	12.5	15.5	24,000	3 98	8.7	14,500	2.70
3645504	25HBC524A**30	CAP**2417A**	58MV(B,C)060−14	23,400	12.5	15.5	24,000	3 92	8.6	14,500	2.68
3645574	25HBC524A**30	CAP**2417A**	58UVB060−14	23,400	12.5	15.5	24,000	3 92	8.6	14,500	2.68
3810463	25HBC524A**30	CAP**2417A**	58VLR105−12	23,800	12.5	15.0	24,000	3 90	8.5	14,500	2.66
3810462	25HBC524A**30	CAP**2417A**	58VMR105−12	23,400	12.5	15.0	24,000	3 80	8.5	14,100	2.60
4804530	25HBC524A**30	CAP**2417A**	59*N*A060V17**14	23,400	12.5	15.2	24,000	3.78	8.5	14,400	2.60
4804531	25HBC524A**30	CAP**2417A**	59*N*A080V17**14	23,400	12.5	15.2	24,000	3.76	8.5	14,100	2.56
4804532	25HBC524A**30	CAP**2417A**	59*P5A040E14**10	23,600	11.5	14.0	24,000	3.76	8.5	15,000	2.56
4804533	25HBC524A**30	CAP**2417A**	59*P5A060E17**14	23,600	12.5	15.2	24,000	3 82	8.5	14,400	2.62
4194137	25HBC524A**30	CAP**2417A**	OVLAAB036098	23,800	12.5	15.0	24,000	3 88	8.5	14,500	2.66
4194136	25HBC524A**30	CAP**2417A**	OVMAAB036098	23,800	12.5	15.0	24,000	3 86	8.5	14,600	2.64
3645542	25HBC524A**30	CAP**2417A**+TDR		23,400	11.2	13.5	24,000	3.72	8.3	15,200	2.54
3645447	25HBC524A**30	CAP**3014A**	58CV(A,X)070−12	23,400	12.5	15.5	24,000	3 82	8.5	14,400	2.64
3645534	25HBC524A**30	CAP**3014A**	58PH*045−08	23,400	12.5	15.3	24,000	3 88	8.7	14,600	2.66
4804534	25HBC524A**30	CAP**3014A**	59*P5A040E14**10	23,800	11.5	14.0	24,000	3.78	8.5	15,100	2.58
3645543	25HBC524A**30	CAP**3014A**+TDR		23,400	11.2	13.5	24,000	3.74	8.3	15,200	2.56
3645455	25HBC524A**30	CAP**3017A**	58CV(A,X)090−16	23,400	12.5	15.5	24,000	3 86	8.5	14,400	2.68
3645478	25HBC524A**30	CAP**3017A**	58ME(B,C)040−12	23,400	12.5	15.5	24,000	4 04	9.0	14,600	2.74
3645487	25HBC524A**30	CAP**3017A**	58ME(B,C)060−12	23,400	12.5	15.5	24,000	4 06	9.0	14,600	2.76
3645496	25HBC524A**30	CAP**3017A**	58ME(B,C)080−12	23,400	12.5	15.5	24,000	4 00	9.0	14,500	2.72
3646401	25HBC524A**30	CAP**3017A**	58MEB040−12	23,400	12.5	15.5	24,000	4 04	9.0	14,600	2.74
3645505	25HBC524A**30	CAP**3017A**	58MV(B,C)060−14	23,400	12.5	15.5	24,000	3 94	8.7	14,500	2.70
3645575	25HBC524A**30	CAP**3017A**	58UVB060−14	23,400	12.5	15.5	24,000	3 94	8.7	14,500	2.70
3810465	25HBC524A**30	CAP**3017A**	58VLR105−12	24,000	12.5	15.0	24,000	3 92	8.5	14,500	2.70
3810464	25HBC524A**30	CAP**3017A**	58VMR105−12	23,600	12.5	15.0	24,000	3 82	8.5	14,300	2.64
4804535	25HBC524A**30	CAP**3017A**	59*N*A060V17**14	23,600	12.5	15.2	24,000	3 82	8.5	14,500	2.64
4804536	25HBC524A**30	CAP**3017A**	59*N*A080V17**14	23,600	12.6	15.5	24,000	3.78	8.5	14,400	2.62
4804537	25HBC524A**30	CAP**3017A**	59*P5A040E14**10	24,000	11.7	14.2	24,000	3 80	8.5	15,100	2.58
4804538	25HBC524A**30	CAP**3017A**	59*P5A060E17**14	23,800	12.7	15.5	24,000	3 86	8.8	14,500	2.66
4194139	25HBC524A**30	CAP**3017A**	OVLAAB036098	24,000	12.5	15.0	24,000	3 92	8.8	14,500	2.68
4194138	25HBC524A**30	CAP**3017A**	OVMAAB036098	24,000	12.5	15.0	24,000	3 90	8.8	14,600	2.68
3645544	25HBC524A**30	CAP**3017A**+TDR		23,400	11.2	13.5	24,000	3.74	8.3	15,200	2.56
3645475	25HBC524A**30	CAP**3619A**	58HDV040−−12	24,000	12.5	15.0	24,000	3 94	8.7	14,700	2.68
3645476	25HBC524A**30	CAP**3619A**	58HDV060−−12	24,000	12.5	15.0	24,000	4 02	8.8	14,800	2.70
3645448	25HBC524A**30	CNPH*2417A**	58CV(A,X)070−12	23,400	12.5	15.0	24,000	3 86	8.5	14,400	2.62
3645456	25HBC524A**30	CNPH*2417A**	58CV(A,X)090−16	23,400	12.5	15.0	24,000	3 90	8.5	14,400	2.66
3645463	25HBC524A**30	CNPH*2417A**	58CV(A,X)110−20	23,400	12.5	15.0	24,000	3 88	8.5	14,500	2.64

See notes on page 36

COMBINATION RATINGS CONTINUED

AHRI Ref. No.	Model Number	Coil Model Number	Furnace Model Number	Cooling Capacity	EER	SEER	High Temp		HSPF	Low Temp	
							E Capacity	E COP		H Capacity	H COP
3645467	25HBC524A**30	CNPH*2417A**	58CV(A,X)135−22	23,400	12.5	15.0	24,000	3 88	8.5	14,400	2.64
3645471	25HBC524A**30	CNPH*2417A**	58CV(A,X)155−22	23,400	12.5	15.0	24,000	3 90	8.5	14,400	2.64
3756325	25HBC524A**30	CNPH*2417A**	58HDV040−−12	23,600	12.2	14.5	24,000	3 88	8.5	14,700	2.62
3756326	25HBC524A**30	CNPH*2417A**	58HDV060−−12	23,800	12.2	14.5	24,000	3 92	8.6	14,800	2.64
3645479	25HBC524A**30	CNPH*2417A**	58ME(B,C)040−12	23,400	12.5	15.5	24,000	3 98	8.7	14,500	2.68
3645488	25HBC524A**30	CNPH*2417A**	58ME(B,C)060−12	23,400	12.5	15.5	24,000	4 00	8.7	14,600	2.70
3645497	25HBC524A**30	CNPH*2417A**	58ME(B,C)080−12	23,400	12.5	15.5	24,000	3 98	8.7	14,500	2.68
3646402	25HBC524A**30	CNPH*2417A**	58MEB040−12	23,400	12.5	15.5	24,000	3 98	8.7	14,500	2.68
3645506	25HBC524A**30	CNPH*2417A**	58MV(B,C)060−14	23,400	12.5	15.0	24,000	3 96	8.6	14,600	2.68
3645513	25HBC524A**30	CNPH*2417A**	58MV(B,C)080−14	23,400	12.5	15.0	24,000	3 86	8.5	14,400	2.64
3645517	25HBC524A**30	CNPH*2417A**	58MV(B,C)080−20	23,200	12.5	15.0	24,000	3 80	8.5	14,100	2.58
3645521	25HBC524A**30	CNPH*2417A**	58MV(B,C)100−20	23,400	12.5	15.0	24,000	3 88	8.5	14,400	2.64
3645525	25HBC524A**30	CNPH*2417A**	58MV(B,C)120−20	23,400	12.5	15.0	24,000	3 92	8.6	14,500	2.66
3645529	25HBC524A**30	CNPH*2417A**	58MVB040−14	23,400	12.5	15.0	24,000	3 88	8.5	14,500	2.64
3645535	25HBC524A**30	CNPH*2417A**	58PH*045−08	23,400	12.0	15.0	24,000	3 90	8.5	14,500	2.64
3810473	25HBC524A**30	CNPH*2417A**	58VLR105−12	23,800	12.5	15.0	24,000	3 96	8.5	14,500	2.68
3810472	25HBC524A**30	CNPH*2417A**	58VMR105−12	23,400	12.5	15.0	24,000	3 84	8.5	14,400	2.62
4804553	25HBC524A**30	CNPH*2417A**	59*N*A060V17**14	23,400	12.3	15.0	24,000	3 84	8.5	14,500	2.62
4804554	25HBC524A**30	CNPH*2417A**	59*N*A080V17**14	23,400	12.5	15.2	24,000	3 82	8.5	14,400	2.60
4804555	25HBC524A**30	CNPH*2417A**	59*N*A100V21**20	23,800	12.5	15.2	24,000	3 92	8.8	14,600	2.64
4804556	25HBC524A**30	CNPH*2417A**	59*N*A120V24**22	23,600	12.5	15.2	24,000	3 92	8.8	14,500	2.64
4804557	25HBC524A**30	CNPH*2417A**	59*P5A040E14**10	23,600	11.5	14.0	24,000	3 80	8.5	15,100	2.56
4804558	25HBC524A**30	CNPH*2417A**	59*P5A060E17**14	23,400	12.4	15.2	24,000	3 82	8.5	14,400	2.62
4194148	25HBC524A**30	CNPH*2417A**	OVLAAB036098	23,800	12.0	15.0	24,000	3 92	8.8	14,600	2.66
4194147	25HBC524A**30	CNPH*2417A**	OVMAAB036098	23,800	12.0	15.0	24,000	3 92	8.8	14,700	2.64
3645546	25HBC524A**30	CNPH*2417A**+TDR		23,400	11.2	13.5	24,000	3 80	8.3	15,200	2.54
3645449	25HBC524A**30	CNPH*3017A**	58CV(A,X)070−12	23,400	12.5	15.5	24,000	3 84	8.5	14,400	2.66
3645457	25HBC524A**30	CNPH*3017A**	58CV(A,X)090−16	23,400	12.5	15.5	24,000	3 88	8.5	14,400	2.68
3645464	25HBC524A**30	CNPH*3017A**	58CV(A,X)110−20	23,400	12.5	15.5	24,000	3 86	8.5	14,400	2.66
3645468	25HBC524A**30	CNPH*3017A**	58CV(A,X)135−22	23,400	12.5	15.5	24,000	3 88	8.5	14,400	2.68
3645472	25HBC524A**30	CNPH*3017A**	58CV(A,X)155−22	23,400	12.5	15.5	24,000	3 88	8.5	14,400	2.68
3756327	25HBC524A**30	CNPH*3017A**	58HDV040−−12	24,000	12.2	15.0	24,000	3 90	8.6	14,700	2.66
3756328	25HBC524A**30	CNPH*3017A**	58HDV060−−12	24,000	12.5	15.0	24,000	3 98	8.7	14,800	2.70
3645480	25HBC524A**30	CNPH*3017A**	58ME(B,C)040−12	23,400	12.5	15.5	24,000	4 04	9.0	14,600	2.74
3645489	25HBC524A**30	CNPH*3017A**	58ME(B,C)060−12	23,400	12.5	15.5	24,000	4 06	9.0	14,600	2.74
3645498	25HBC524A**30	CNPH*3017A**	58ME(B,C)080−12	23,400	12.5	15.5	24,000	4 00	9.0	14,600	2.72
3646403	25HBC524A**30	CNPH*3017A**	58MEB040−12	23,400	12.5	15.5	24,000	4 04	9.0	14,600	2.74
3645507	25HBC524A**30	CNPH*3017A**	58MV(B,C)060−14	23,400	12.5	15.5	24,000	3 96	8.7	14,500	2.70
3645514	25HBC524A**30	CNPH*3017A**	58MV(B,C)080−14	23,400	12.5	15.5	24,000	3 84	8.5	14,400	2.66
3645518	25HBC524A**30	CNPH*3017A**	58MV(B,C)080−20	23,400	12.5	15.5	24,000	3.78	8.5	14,000	2.60
3645522	25HBC524A**30	CNPH*3017A**	58MV(B,C)100−20	23,400	12.5	15.5	24,000	3 86	8.5	14,400	2.66
3645526	25HBC524A**30	CNPH*3017A**	58MV(B,C)120−20	23,400	12.5	15.5	24,000	3 90	8.6	14,400	2.68
3645530	25HBC524A**30	CNPH*3017A**	58MVB040−14	23,400	12.5	15.5	24,000	3 86	8.5	14,400	2.66
3645536	25HBC524A**30	CNPH*3017A**	58PH*045−08	23,400	12.5	15.3	24,000	3 92	8.7	14,600	2.68
3810475	25HBC524A**30	CNPH*3017A**	58VLR105−12	24,000	12.5	15.0	24,000	3 94	8.5	14,500	2.70
3810474	25HBC524A**30	CNPH*3017A**	58VMR105−12	23,600	12.5	15.0	24,000	3 84	8.5	14,300	2.66
4804559	25HBC524A**30	CNPH*3017A**	59*N*A060V17**14	23,600	12.5	15.2	24,000	3 82	8.5	14,500	2.64
4804560	25HBC524A**30	CNPH*3017A**	59*N*A080V17**14	23,600	12.7	15.5	24,000	3 80	8.5	14,400	2.64
4804561	25HBC524A**30	CNPH*3017A**	59*N*A100V21**20	24,000	12.7	15.5	24,000	3 90	8.8	14,500	2.68
4804562	25HBC524A**30	CNPH*3017A**	59*N*A120V24**22	23,800	12.7	15.5	24,000	3 90	8.8	14,500	2.68
4804563	25HBC524A**30	CNPH*3017A**	59*P5A040E14**10	24,000	11.7	14.2	24,000	3 80	8.5	15,100	2.58
4804564	25HBC524A**30	CNPH*3017A**	59*P5A060E17**14	23,800	12.7	15.5	24,000	3 86	8.8	14,500	2.66
4194150	25HBC524A**30	CNPH*3017A**	OVLAAB036098	24,000	12.5	15.0	24,000	3 92	8.8	14,500	2.68
4194149	25HBC524A**30	CNPH*3017A**	OVMAAB036098	24,000	12.5	15.0	24,000	3 90	8.8	14,600	2.68
3645547	25HBC524A**30	CNPH*3017A**+TDR		23,400	11.2	13.5	24,000	3.76	8.3	15,200	2.56
3756329	25HBC524A**30	CNPH*3117A**	58HDV040−−12	24,000	12.5	15.0	24,000	4 08	8.9	14,800	2.72
3756330	25HBC524A**30	CNPH*3117A**	58HDV060−−12	24,000	12.5	15.0	24,000	4.18	9.0	14,900	2.76
3810477	25HBC524A**30	CNPH*3117A**	58VLR105−12	24,000	12.5	15.0	24,000	4.10	8.5	14,600	2.76
3810476	25HBC524A**30	CNPH*3117A**	58VMR105−12	24,000	12.5	15.0	24,000	4 00	8.5	14,400	2.72
4804565	25HBC524A**30	CNPH*3117A**	59*N*A060V17**14	24,000	12.7	15.5	24,000	3 98	8.8	14,600	2.70
4804566	25HBC524A**30	CNPH*3117A**	59*N*A080V17**14	24,000	12.7	15.5	24,000	3 96	8.8	14,400	2.68
4804567	25HBC524A**30	CNPH*3117A**	59*N*A100V21**20	24,000	12.7	15.5	24,000	4 08	9.0	14,600	2.74
4804568	25HBC524A**30	CNPH*3117A**	59*N*A120V24**22	24,000	12.7	15.5	24,000	4 06	9.0	14,600	2.72
4804569	25HBC524A**30	CNPH*3117A**	59*P5A040E14**10	24,000	12.0	14.5	24,000	3 98	9.0	15,200	2.64
4804570	25HBC524A**30	CNPH*3117A**	59*P5A060E17**14	24,000	12.7	15.5	24,000	4 04	9.0	14,600	2.72
3645450	25HBC524A**30	CNPV*2414A**	58CV(A,X)070−12	23,400	12.5	15.0	24,000	3 86	8.5	14,400	2.62
3645537	25HBC524A**30	CNPV*2414A**	58PH*045−08	23,400	12.5	15.0	24,000	3 90	8.5	14,500	2.64
4804539	25HBC524A**30	CNPV*2414A**	59*P5A040E14**10	23,600	11.5	14.0	24,000	3 80	8.5	15,100	2.56
3645548	25HBC524A**30	CNPV*2414A**+TDR		23,400	11.2	13.5	24,000	3 80	8.3	15,200	2.54
3645458	25HBC524A**30	CNPV*2417A**	58CV(A,X)090−16	23,400	12.5	15.0	24,000	3 90	8.5	14,400	2.66
4194140	25HBC524A**30	CNPV*2417A**	58HDV040−−12	23,600	12.0	14.5	24,000	3 88	8.7	14,700	2.62
3645481	25HBC524A**30	CNPV*2417A**	58ME(B,C)040−12	23,400	12.5	15.5	24,000	3 98	8.7	14,500	2.68
3645490	25HBC524A**30	CNPV*2417A**	58ME(B,C)060−12	23,400	12.5	15.5	24,000	4 00	8.7	14,600	2.70
3645499	25HBC524A**30	CNPV*2417A**	58ME(B,C)080−12	23,400	12.5	15.5	24,000	3 98	8.7	14,500	2.68
3646404	25HBC524A**30	CNPV*2417A**	58MEB040−12	23,400	12.5	15.5	24,000	3 98	8.7	14,500	2.68
3645508	25HBC524A**30	CNPV*2417A**	58MV(B,C)060−14	23,400	12.5	15.0	24,000	3 96	8.6	14,600	2.68
3645576	25HBC524A**30	CNPV*2417A**	58UVB060−14	23,400	12.5	15.0	24,000	3 96	8.6	14,600	2.68
3810467	25HBC524A**30	CNPV*2417A**	58VLR105−12	23,800	12.5	15.0	24,000	3 96	8.5	14,500	2.68
3810466	25HBC524A**30	CNPV*2417A**	58VMR105−12	23,400	12.5	15.0	24,000	3 84	8.5	14,400	2.62
4804540	25HBC524A**30	CNPV*2417A**	59*N*A060V17**14	23,400	12.3	15.0	24,000	3 84	8.5	14,500	2.62

See notes on page 36

COMBINATION RATINGS CONTINUED

AHRI Ref. No.	Model Number	Coil Model Number	Furnace Model Number	Cooling Capacity	EER	SEER	High Temp		HSPF	Low Temp	
							E Capacity	E COP		H Capacity	H COP
4804541	25HBC524A**30	CNPV*2417A**	59*N*A080V17**14	23,400	12.5	15.2	24,000	3 82	8.5	14,400	2.60
4804542	25HBC524A**30	CNPV*2417A**	59*P5A040E14**10	23,600	11.5	14.0	24,000	3 80	8.5	15,100	2.56
4804543	25HBC524A**30	CNPV*2417A**	59*P5A060E17**14	23,400	12.4	15.2	24,000	3 82	8.5	14,400	2.62
4194144	25HBC524A**30	CNPV*2417A**	OVLAAB036098	23,800	12.0	15.0	24,000	3 92	8.8	14,600	2.66
4194143	25HBC524A**30	CNPV*2417A**	OVMAAB036098	23,800	12.0	15.0	24,000	3 92	8.8	14,700	2.64
3645549	25HBC524A**30	CNPV*2417A**+TDR		23,400	11.2	13.5	24,000	3 80	8.3	15,200	2.54
3645451	25HBC524A**30	CNPV*3014A**	58CV(A,X)070–12	23,400	12.5	15.5	24,000	3 82	8.5	14,400	2.64
3645538	25HBC524A**30	CNPV*3014A**	58PH*045–08	23,400	12.5	15.3	24,000	3 86	8.7	14,600	2.66
4804544	25HBC524A**30	CNPV*3014A**	59*P5A040E14**10	23,800	11.5	14.0	24,000	3.76	8.5	15,100	2.56
3645550	25HBC524A**30	CNPV*3014A**+TDR		23,400	11.2	13.5	24,000	3.76	8.3	15,200	2.56
3645459	25HBC524A**30	CNPV*3017A**	58CV(A,X)090–16	23,400	12.5	15.5	24,000	3 88	8.5	14,400	2.68
4194141	25HBC524A**30	CNPV*3017A**	58HDV040––12	24,000	12.0	15.0	24,000	3 90	8.8	14,700	2.66
4194142	25HBC524A**30	CNPV*3017A**	58HDV060––12	24,000	12.5	15.0	24,000	3 98	8.5	14,800	2.70
3645482	25HBC524A**30	CNPV*3017A**	58ME(B,C)040–12	23,400	12.5	15.5	24,000	4 04	9.0	14,600	2.74
3645491	25HBC524A**30	CNPV*3017A**	58ME(B,C)060–12	23,400	12.5	15.5	24,000	4 06	9.0	14,600	2.74
3645500	25HBC524A**30	CNPV*3017A**	58ME(B,C)080–12	23,400	12.5	15.5	24,000	4 00	9.0	14,600	2.72
3646405	25HBC524A**30	CNPV*3017A**	58MEB040–12	23,400	12.5	15.5	24,000	4 04	9.0	14,600	2.74
3645509	25HBC524A**30	CNPV*3017A**	58MV(B,C)060–14	23,400	12.5	15.5	24,000	3 96	8.7	14,500	2.70
3645577	25HBC524A**30	CNPV*3017A**	58UVB060–14	23,400	12.5	15.5	24,000	3 96	8.7	14,500	2.70
3810469	25HBC524A**30	CNPV*3017A**	58VLR105–12	24,000	12.5	15.0	24,000	3 94	8.5	14,500	2.70
3810468	25HBC524A**30	CNPV*3017A**	58VMR105–12	23,600	12.5	15.0	24,000	3 84	8.5	14,300	2.66
4804545	25HBC524A**30	CNPV*3017A**	59*N*A060V17**14	23,600	12.5	15.2	24,000	3 82	8.5	14,500	2.64
4804546	25HBC524A**30	CNPV*3017A**	59*N*A080V17**14	23,600	12.7	15.5	24,000	3 80	8.5	14,400	2.64
4804547	25HBC524A**30	CNPV*3017A**	59*P5A040E14**10	24,000	11.7	14.2	24,000	3 80	8.5	15,100	2.58
4804548	25HBC524A**30	CNPV*3017A**	59*P5A060E17**14	23,800	12.7	15.5	24,000	3 86	8.8	14,500	2.66
4194146	25HBC524A**30	CNPV*3017A**	OVLAAB036098	24,000	12.5	15.0	24,000	3 92	8.8	14,500	2.68
4194145	25HBC524A**30	CNPV*3017A**	OVMAAB036098	24,000	12.5	15.0	24,000	3 90	8.8	14,600	2.68
3645551	25HBC524A**30	CNPV*3017A**+TDR		23,400	11.2	13.5	24,000	3.76	8.3	15,200	2.56
3645460	25HBC524A**30	CNPV*3117A**	58CV(A,X)090–16	23,400	13.0	16.0	24,000	4 04	9.0	14,400	2.74
3645483	25HBC524A**30	CNPV*3117A**	58ME(B,C)040–12	23,400	13.0	16.0	24,000	4 24	9.0	14,700	2.80
3645492	25HBC524A**30	CNPV*3117A**	58ME(B,C)060–12	23,400	13.0	16.0	24,000	4 28	9.0	14,700	2.82
3645501	25HBC524A**30	CNPV*3117A**	58ME(B,C)080–12	23,400	13.0	16.0	24,000	4 20	9.0	14,700	2.80
3646406	25HBC524A**30	CNPV*3117A**	58MEB040–12	23,400	13.0	16.0	24,000	4 24	9.0	14,700	2.80
3645510	25HBC524A**30	CNPV*3117A**	58MV(B,C)060–14	23,400	13.0	16.0	24,000	4.14	9.0	14,600	2.76
3645578	25HBC524A**30	CNPV*3117A**	58UVB060–14	23,400	13.0	16.0	24,000	4.14	9.0	14,600	2.76
3810471	25HBC524A**30	CNPV*3117A**	58VLR105–12	24,000	12.5	15.0	24,000	4.10	8.5	14,600	2.76
3810470	25HBC524A**30	CNPV*3117A**	58VMR105–12	24,000	12.5	15.0	24,000	4 00	8.5	14,500	2.72
4804549	25HBC524A**30	CNPV*3117A**	59*N*A060V17**14	24,000	12.7	15.5	24,000	3 98	8.8	14,600	2.68
4804550	25HBC524A**30	CNPV*3117A**	59*N*A080V17**14	24,000	12.7	15.5	24,000	3 96	8.8	14,500	2.68
4804551	25HBC524A**30	CNPV*3117A**	59*P5A040E14**10	24,000	11.9	14.5	24,000	3 98	8.8	15,200	2.64
4804552	25HBC524A**30	CNPV*3117A**	59*P5A060E17**14	24,000	12.7	15.5	24,000	4 04	9.0	14,600	2.72
3645552	25HBC524A**30	CNPV*3117A**		23,400	11.5	14.0	24,000	3 92	8.7	15,300	2.60
3645452	25HBC524A**30	CSPH*2412A**	58CV(A,X)070–12	23,400	12.5	15.0	24,000	3 84	8.5	14,500	2.64
3645461	25HBC524A**30	CSPH*2412A**	58CV(A,X)090–16	23,400	12.5	15.5	24,000	3 88	8.5	14,400	2.66
3645465	25HBC524A**30	CSPH*2412A**	58CV(A,X)110–20	23,400	12.5	15.0	24,000	3 86	8.5	14,500	2.64
3645469	25HBC524A**30	CSPH*2412A**	58CV(A,X)135–22	23,400	12.5	15.0	24,000	3 88	8.5	14,500	2.66
3645473	25HBC524A**30	CSPH*2412A**	58CV(A,X)155–22	23,400	12.5	15.0	24,000	3 88	8.5	14,500	2.66
3756331	25HBC524A**30	CSPH*2412A**	58HDV040––12	23,600	12.2	14.5	24,000	3 86	8.5	14,700	2.62
3756332	25HBC524A**30	CSPH*2412A**	58HDV060––12	23,800	12.2	14.5	24,000	3 90	8.6	14,800	2.64
3645484	25HBC524A**30	CSPH*2412A**	58ME(B,C)040–12	23,400	12.5	15.5	24,000	3 96	8.7	14,500	2.68
3645493	25HBC524A**30	CSPH*2412A**	58ME(B,C)060–12	23,400	12.5	15.5	24,000	3 98	8.7	14,600	2.70
3645502	25HBC524A**30	CSPH*2412A**	58ME(B,C)080–12	23,400	12.5	15.5	24,000	3 94	8.6	14,500	2.68
3646407	25HBC524A**30	CSPH*2412A**	58MEB040–12	23,400	12.5	15.5	24,000	3 96	8.7	14,500	2.68
3645511	25HBC524A**30	CSPH*2412A**	58MV(B,C)060–14	23,400	12.5	15.0	24,000	3 96	8.6	14,600	2.68
3645515	25HBC524A**30	CSPH*2412A**	58MV(B,C)080–14	23,400	12.5	15.0	24,000	3 84	8.5	14,500	2.64
3645519	25HBC524A**30	CSPH*2412A**	58MV(B,C)080–20	23,400	12.5	15.0	24,000	3 80	8.5	14,100	2.58
3645523	25HBC524A**30	CSPH*2412A**	58MV(B,C)100–20	23,400	12.5	15.0	24,000	3 86	8.5	14,400	2.66
3645527	25HBC524A**30	CSPH*2412A**	58MV(B,C)120–20	23,400	12.5	15.0	24,000	3 92	8.6	14,500	2.68
3645531	25HBC524A**30	CSPH*2412A**	58MVB040–14	23,400	12.5	15.0	24,000	3 86	8.5	14,500	2.64
3645539	25HBC524A**30	CSPH*2412A**	58PH*045–08	23,400	12.5	15.0	24,000	3 88	8.5	14,600	2.64
3810479	25HBC524A**30	CSPH*2412A**	58VLR105–12	24,000	12.5	15.0	24,000	3 96	8.5	14,600	2.68
3810478	25HBC524A**30	CSPH*2412A**	58VMR105–12	23,600	12.5	15.0	24,000	3 82	8.5	14,500	2.62
4804571	25HBC524A**30	CSPH*2412A**	59*N*A060V17**14	23,800	12.4	15.2	24,000	3 82	8.5	14,600	2.62
4804572	25HBC524A**30	CSPH*2412A**	59*N*A080V17**14	23,600	12.5	15.2	24,000	3 80	8.5	14,400	2.62
4804573	25HBC524A**30	CSPH*2412A**	59*N*A100V21**20	24,000	12.5	15.2	24,000	3 92	8.8	14,600	2.66
4804574	25HBC524A**30	CSPH*2412A**	59*N*A120V24**22	24,000	12.5	15.2	24,000	3 90	8.8	14,600	2.66
4804575	25HBC524A**30	CSPH*2412A**	59*P5A040E14**10	23,800	11.5	14.0	24,000	3 80	8.5	15,100	2.56
4804576	25HBC524A**30	CSPH*2412A**	59*P5A060E17**14	23,600	12.5	15.2	24,000	3.78	8.5	14,400	2.60
4194152	25HBC524A**30	CSPH*2412A**	OVLAAB036098	24,000	12.5	15.0	24,000	3 92	8.8	14,700	2.66
4194151	25HBC524A**30	CSPH*2412A**	OVMAAB036098	24,000	12.0	15.0	24,000	3 92	8.8	14,700	2.66
3645553	25HBC524A**30	CSPH*2412A**+TDR		23,400	11.2	13.5	24,000	3 82	8.3	15,300	2.56
3645453	25HBC524A**30	CSPH*3012A**	58CV(A,X)070–12	23,400	12.5	15.5	24,000	3 82	8.5	14,400	2.64
3645462	25HBC524A**30	CSPH*3012A**	58CV(A,X)090–16	23,400	12.5	15.5	24,000	3 86	8.5	14,400	2.66
3645466	25HBC524A**30	CSPH*3012A**	58CV(A,X)110–20	23,400	12.5	15.5	24,000	3 86	8.5	14,400	2.66
3645470	25HBC524A**30	CSPH*3012A**	58CV(A,X)135–22	23,400	12.5	15.5	24,000	3 86	8.5	14,400	2.66
3645474	25HBC524A**30	CSPH*3012A**	58CV(A,X)155–22	23,400	12.5	15.5	24,000	3 88	8.5	14,400	2.66
3756333	25HBC524A**30	CSPH*3012A**	58HDV040––12	24,000	12.2	15.0	24,000	3 88	8.6	14,700	2.66
3756334	25HBC524A**30	CSPH*3012A**	58HDV060––12	24,000	12.5	15.0	24,000	3 96	8.7	14,800	2.68
3645485	25HBC524A**30	CSPH*3012A**	58ME(B,C)040–12	23,400	12.5	15.5	24,000	4 00	9.0	14,600	2.72
3645494	25HBC524A**30	CSPH*3012A**	58ME(B,C)060–12	23,400	12.5	15.5	24,000	4 02	9.0	14,600	2.74

See notes on page 36

COMBINATION RATINGS CONTINUED

AHRI Ref. No.	Model Number	Coil Model Number	Furnace Model Number	Cooling Capacity	EER	SEER	High Temp		HSPF	Low Temp	
							E Capacity	E COP		H Capacity	H COP
3645503	25HBC524A**30	CSPH*3012A**	58ME(B,C)080−12	23,400	12.5	15.5	24,000	3 98	9.0	14,500	2.72
3646408	25HBC524A**30	CSPH*3012A**	58MEB040−12	23,400	12.5	15.5	24,000	4 00	9.0	14,600	2.72
3645512	25HBC524A**30	CSPH*3012A**	58MV(B,C)060−14	23,400	12.5	15.5	24,000	3 96	8.7	14,500	2.70
3645516	25HBC524A**30	CSPH*3012A**	58MV(B,C)080−14	23,400	12.5	15.5	24,000	3 84	8.5	14,400	2.64
3645520	25HBC524A**30	CSPH*3012A**	58MV(B,C)080−20	23,400	12.5	15.5	24,000	3.78	8.5	14,000	2.60
3645524	25HBC524A**30	CSPH*3012A**	58MV(B,C)100−20	23,400	12.5	15.5	24,000	3 86	8.5	14,400	2.66
3645528	25HBC524A**30	CSPH*3012A**	58MV(B,C)120−20	23,400	12.5	15.5	24,000	3 90	8.6	14,400	2.68
3645532	25HBC524A**30	CSPH*3012A**	58MVB040−14	23,400	12.5	15.5	24,000	3 84	8.5	14,500	2.66
3645540	25HBC524A**30	CSPH*3012A**	58PH*045−08	23,400	12.5	15.3	24,000	3 90	8.7	14,600	2.66
3810481	25HBC524A**30	CSPH*3012A**	58VLR105−12	24,000	12.5	15.0	24,000	3 94	8.5	14,500	2.70
3810480	25HBC524A**30	CSPH*3012A**	58VMR105−12	23,800	12.5	15.0	24,000	3 82	8.5	14,400	2.64
4804577	25HBC524A**30	CSPH*3012A**	59*N*A060V17**14	23,800	12.5	15.2	24,000	3 88	8.5	14,500	2.64
4804578	25HBC524A**30	CSPH*3012A**	59*N*A080V17**14	23,800	12.7	15.5	24,000	3 84	8.5	14,400	2.64
4804579	25HBC524A**30	CSPH*3012A**	59*N*A100V21**20	24,000	12.7	15.5	24,000	3 96	8.8	14,600	2.68
4804580	25HBC524A**30	CSPH*3012A**	59*N*A120V24**22	24,000	12.7	15.5	24,000	3 94	8.8	14,500	2.68
4804581	25HBC524A**30	CSPH*3012A**	59*P5A040E14**10	24,000	11.8	14.2	24,000	3 86	8.5	15,100	2.58
4804582	25HBC524A**30	CSPH*3012A**	59*P5A060E17**14	23,800	12.7	15.5	24,000	3 88	8.8	14,500	2.66
4194154	25HBC524A**30	CSPH*3012A**	OVLAAB036098	24,000	12.5	15.0	24,000	3 92	8.8	14,600	2.68
4194153	25HBC524A**30	CSPH*3012A**	OVMAAB036098	24,000	12.5	15.0	24,000	3 90	8.8	14,600	2.66
3645554	25HBC524A**30	CSPH*3012A**+TDR		23,400	11.2	13.5	24,000	3.78	8.3	15,200	2.56
3810458	25HBC524A**30	FB4CNF024		23,400	11.5	13.5	24,000	3 80	8.5	14,700	2.58
3645555	25HBC524A**30	FB4CNF024+TXV		23,400	12.0	14.5	24,000	3 80	8.5	14,700	2.58
3810459	25HBC524A**30	FB4CNF030		24,000	12.0	14.5	24,000	3 96	8.5	14,700	2.68
3645556	25HBC524A**30	FB4CNF030+TXV		23,400	12.5	15.0	24,000	3 96	8.8	14,700	2.68
3645557	25HBC524A**30	FE4AN(B,F)003+UI		23,800	13.0	16.0	24,000	3 96	9.0	14,400	2.70
3645558	25HBC524A**30	FE4ANF002+UI		23,800	12.5	15.5	24,000	3 94	9.0	14,400	2.70
3645559	25HBC524A**30	FF1ENP024		23,400	11.0	13.5	24,000	3 66	8.2	15,200	2.50
3645560	25HBC524A**30	FF1ENP025		23,800	12.0	15.0	24,000	3 88	8.5	14,700	2.64
3645561	25HBC524A**30	FF1ENP030		23,400	11.2	13.5	24,000	3 66	8.2	15,200	2.50
3645562	25HBC524A**30	FF1ENP031		23,800	12.0	15.0	24,000	3 86	8.5	14,800	2.64
3645563	25HBC524A**30	FF1ENP037		23,800	12.5	15.0	24,000	3 94	8.7	14,800	2.68
3645566	25HBC524A**30	FV4CN(B F)003		23,800	12.5	16.0	24,000	3 96	9.0	14,400	2.70
3645567	25HBC524A**30	FV4CNF002		23,800	12.5	15.8	24,000	3 94	9.0	14,400	2.70
3645570	25HBC524A**30	FX4DN(B,F)031		24,000	12.5	15.0	24,000	3 96	9.0	14,800	2.68
3810460	25HBC524A**30	FY5BNF024		23,800	11.5	13.5	24,000	3 82	8.5	14,900	2.62
3692769	25HBC524A**30	FY5BNF024+TXV		23,400	12.0	14.5	24,000	3 82	8.3	14,900	2.62
3810461	25HBC524A**30	FY5BNF030		24,000	11.5	13.5	24,000	3 86	8.5	15,000	2.62
3692770	25HBC524A**30	FY5BNF030+TXV		23,400	12.0	14.5	24,000	3 88	8.5	15,000	2.62
3645739	25HBC530A**30	†FX4DN(B,F)031		28,800	12.5	15.3	28,600	3 98	8.7	17,000	2.66
3645579	25HBC530A**30	CAP**3014A**	58CV(A,X)070−12	27,800	12.0	14.5	28,200	3 80	8.1	16,800	2.58
3645705	25HBC530A**30	CAP**3014A**+TDR		28,000	11.2	13.0	29,200	3.72	8.0	17,700	2.50
3645586	25HBC530A**30	CAP**3017A**	58CV(A,X)090−16	28,000	12.5	15.0	28,000	3 84	8.2	16,600	2.62
4194155	25HBC530A**30	CAP**3017A**	58HDV040−−12	28,000	12.0	14.0	28,600	3.78	8.2	17,100	2.56
4194156	25HBC530A**30	CAP**3017A**	58HDV060−−12	28,200	12.0	14.5	28,600	3 84	8.2	17,100	2.58
3645612	25HBC530A**30	CAP**3017A**	58ME(B,C)040−12	28,200	12.5	15.0	28,400	3 92	8.3	16,800	2.64
3645622	25HBC530A**30	CAP**3017A**	58ME(B,C)060−12	28,200	12.5	15.0	28,400	3 94	8.3	16,900	2.66
3645632	25HBC530A**30	CAP**3017A**	58ME(B,C)080−12	28,200	12.5	15.0	28,200	3 90	8.3	16,800	2.64
3645642	25HBC530A**30	CAP**3017A**	58ME(B,C)080−16	28,200	12.5	15.0	28,600	3 94	8.4	17,000	2.66
3646409	25HBC530A**30	CAP**3017A**	58MEB040−12	28,200	12.5	15.0	28,400	3 92	8.3	16,800	2.64
3645652	25HBC530A**30	CAP**3017A**	58MV(B,C)060−14	28,000	12.5	15.0	28,200	3 88	8.2	16,700	2.62
3645689	25HBC530A**30	CAP**3017A**	58PH*070−16	28,000	12.0	14.5	28,400	3 84	8.2	17,000	2.60
3645743	25HBC530A**30	CAP**3017A**	58UVB060−14	28,000	12.5	15.0	28,200	3 88	8.2	16,700	2.62
3810487	25HBC530A**30	CAP**3017A**	58VLR105−12	28,000	12.5	15.0	28,200	3 86	8.4	16,800	2.60
3810486	25HBC530A**30	CAP**3017A**	58VMR105−12	27,800	12.5	15.0	28,000	3.78	8.2	16,600	2.58
4804583	25HBC530A**30	CAP**3017A**	59*N*A060V17**14	27,800	12.0	14.5	28,200	3.76	8.2	16,900	2.56
4804584	25HBC530A**30	CAP**3017A**	59*N*A080V17**14	28,000	12.0	14.5	28,200	3 82	8.2	16,800	2.58
4804585	25HBC530A**30	CAP**3017A**	59*P5A060E17**14	28,000	12.0	14.5	28,400	3 82	8.2	17,000	2.58
4804586	25HBC530A**30	CAP**3017A**	59*P5A080E17**16	28,200	12.0	14.5	28,600	3 88	8.5	17,100	2.60
4194158	25HBC530A**30	CAP**3017A**	OVLAAB036098	28,000	12.0	14.5	28,200	3 80	8.2	16,900	2.58
4194157	25HBC530A**30	CAP**3017A**	OVMAAB036098	28,000	12.0	14.5	28,400	3 80	8.2	17,000	2.58
3645706	25HBC530A**30	CAP**3017A**+TDR		28,000	11.2	13.0	29,200	3.72	8.0	17,700	2.50
3645580	25HBC530A**30	CAP**3614A**	58CV(A,X)070−12	28,000	12.0	14.5	28,200	3 82	8.1	16,800	2.60
3645707	25HBC530A**30	CAP**3614A**+TDR		28,000	11.2	13.0	29,200	3.74	8.0	17,700	2.52
3645587	25HBC530A**30	CAP**3617A**	58CV(A,X)090−16	28,000	12.5	15.3	28,000	3 86	8.5	16,600	2.62
4194159	25HBC530A**30	CAP**3617A**	58HDV040−−12	28,000	12.0	14.0	28,600	3 82	8.2	17,100	2.56
4194160	25HBC530A**30	CAP**3617A**	58HDV060−−12	28,200	12.0	14.5	28,600	3 86	8.4	17,100	2.60
3645613	25HBC530A**30	CAP**3617A**	58ME(B,C)040−12	28,200	12.5	15.3	28,400	3 96	8.5	16,900	2.66
3645623	25HBC530A**30	CAP**3617A**	58ME(B,C)060−12	28,200	12.5	15.3	28,400	3 96	8.5	16,900	2.66
3645633	25HBC530A**30	CAP**3617A**	58ME(B,C)080−12	28,200	12.5	15.3	28,400	3 94	8.5	16,800	2.66
3645643	25HBC530A**30	CAP**3617A**	58ME(B,C)080−16	28,200	12.5	15.0	28,600	3 98	8.6	17,000	2.66
3646410	25HBC530A**30	CAP**3617A**	58MEB040−12	28,200	12.5	15.3	28,400	3 96	8.5	16,900	2.66
3645653	25HBC530A**30	CAP**3617A**	58MV(B,C)060−14	28,000	12.5	15.3	28,200	3 90	8.5	16,800	2.64
3645690	25HBC530A**30	CAP**3617A**	58PH*070−16	28,200	12.0	14.5	28,400	3 86	8.3	17,000	2.60
3645744	25HBC530A**30	CAP**3617A**	58UVB060−14	28,000	12.5	15.3	28,200	3 90	8.5	16,800	2.64
3810489	25HBC530A**30	CAP**3617A**	58VLR105−12	28,200	12.5	15.0	28,400	3 88	8.4	16,800	2.62
3810488	25HBC530A**30	CAP**3617A**	58VMR105−12	27,800	12.5	15.0	28,000	3 80	8.2	16,600	2.60
4804587	25HBC530A**30	CAP**3617A**	59*N*A060V17**14	28,000	12.0	14.5	28,200	3 80	8.2	16,900	2.58
4804588	25HBC530A**30	CAP**3617A**	59*N*A080V17**14	28,000	12.0	14.5	28,400	3 84	8.2	16,900	2.60
4804589	25HBC530A**30	CAP**3617A**	59*P5A060E17**14	28,200	12.0	14.5	28,400	3 86	8.2	17,000	2.60

See notes on page 36

COMBINATION RATINGS CONTINUED

AHRI Ref. No.	Model Number	Coil Model Number	Furnace Model Number	Cooling Capacity	EER	SEER	High Temp		HSPF	Low Temp	
							E Capacity	E COP		H Capacity	H COP
4804590	25HBC530A**30	CAP**3617A**	59*P5A080E17**16	28,400	12.0	14.5	28,600	3 90	8.5	17,100	2.62
4194162	25HBC530A**30	CAP**3617A**	OVLAAB036098	28,000	12.0	14.5	28,400	3 84	8.2	16,900	2.60
4194161	25HBC530A**30	CAP**3617A**	OVMAAB036098	28,000	12.0	14.5	28,400	3 82	8.2	17,000	2.58
3645708	25HBC530A**30	CAP**3617A**+TDR		28,000	11.2	13.5	29,200	3.74	8.2	17,700	2.52
3645610	25HBC530A**30	CAP**3619A**	58HDV040−−12	28,000	12.0	14.0	28,600	3 82	8.1	17,100	2.58
3645611	25HBC530A**30	CAP**3619A**	58HDV060−−12	28,000	12.0	14.5	28,600	3 86	8.2	17,200	2.60
4804596	25HBC530A**30	CAP**3619A**	59*N*A060V17**14	28,000	12.0	14.5	28,400	3 80	8.2	16,900	2.58
4804597	25HBC530A**30	CAP**3619A**	59*N*A080V17**14	28,000	12.0	14.5	28,400	3 84	8.2	16,900	2.60
4804598	25HBC530A**30	CAP**3619A**	59*N*A100V21**20	28,200	12.0	14.5	28,400	3 88	8.2	16,900	2.62
4804599	25HBC530A**30	CAP**3619A**	59*P5A060E17**14	28,200	12.0	14.5	28,400	3 86	8.2	17,000	2.60
4804600	25HBC530A**30	CAP**3619A**	59*P5A080E17**16	28,400	12.0	14.5	28,600	3 90	8.5	17,100	2.62
4194168	25HBC530A**30	CAP**3619A**	OVLAAB036098	28,000	12.0	14.5	28,400	3 84	8.2	16,900	2.60
4194167	25HBC530A**30	CAP**3619A**	OVMAAB036098	28,000	12.0	14.5	28,400	3 82	8.2	17,000	2.58
3645709	25HBC530A**30	CAP**3619A**+TDR		28,000	11.2	13.5	29,200	3.74	8.2	17,700	2.52
3645596	25HBC530A**30	CAP**3621A**	58CV(A,X)110−20	28,000	12.5	15.0	28,200	3 90	8.5	16,700	2.64
4194163	25HBC530A**30	CAP**3621A**	58HDV040−−12	28,200	12.0	14.5	28,600	3 84	8.2	17,100	2.58
4194164	25HBC530A**30	CAP**3621A**	58HDV060−−12	28,400	12.0	14.5	28,800	3 90	8.4	17,200	2.62
3645662	25HBC530A**30	CAP**3621A**	58MV(B,C)080−14	28,000	12.5	15.0	28,000	3 84	8.1	16,600	2.60
3645669	25HBC530A**30	CAP**3621A**	58MV(B,C)080−20	28,000	12.5	15.0	28,200	3 86	8.2	16,700	2.62
3645675	25HBC530A**30	CAP**3621A**	58MV(B,C)100−20	27,800	12.5	15.0	28,000	3 80	8.2	16,600	2.60
3645699	25HBC530A**30	CAP**3621A**	58PH*090−16	28,200	12.5	15.0	28,400	3 96	8.5	16,900	2.66
3645745	25HBC530A**30	CAP**3621A**	58UVB080−14	28,000	12.5	15.0	28,000	3 84	8.1	16,600	2.60
3645746	25HBC530A**30	CAP**3621A**	58UVB080−20	28,000	12.5	15.0	28,200	3 86	8.2	16,700	2.62
3645747	25HBC530A**30	CAP**3621A**	58UVB100−20	27,800	12.5	15.0	28,000	3 80	8.2	16,600	2.60
4804591	25HBC530A**30	CAP**3621A**	59*N*A060V17**14	28,000	12.0	14.5	28,200	3 82	8.2	16,800	2.58
4804592	25HBC530A**30	CAP**3621A**	59*N*A080V17**14	28,200	12.0	14.5	28,200	3 86	8.2	16,800	2.62
4804593	25HBC530A**30	CAP**3621A**	59*N*A100V21**20	28,200	12.5	15.0	28,400	3 90	8.5	16,900	2.62
4804594	25HBC530A**30	CAP**3621A**	59*P5A060E17**14	28,200	12.0	14.5	28,600	3 88	8.2	17,000	2.62
4804595	25HBC530A**30	CAP**3621A**	59*P5A080E17**16	28,400	12.0	14.5	28,600	3 94	8.5	17,100	2.64
4194166	25HBC530A**30	CAP**3621A**	OVLAAB036098	28,000	12.5	15.0	28,200	3 86	8.4	16,800	2.60
4194165	25HBC530A**30	CAP**3621A**	OVMAAB036098	28,000	12.0	14.5	28,400	3 84	8.4	16,900	2.60
3645710	25HBC530A**30	CAP**3621A**+TDR		28,000	11.2	13.5	29,200	3.74	8.2	17,700	2.52
3645581	25HBC530A**30	CNPH*3017A**	58CV(A,X)070−12	28,000	12.0	14.5	28,200	3 82	8.1	16,800	2.60
3645588	25HBC530A**30	CNPH*3017A**	58CV(A,X)090−16	28,000	12.5	15.0	28,000	3 84	8.2	16,700	2.62
3645597	25HBC530A**30	CNPH*3017A**	58CV(A,X)110−20	28,000	12.5	15.0	28,200	3 86	8.2	16,700	2.62
3645602	25HBC530A**30	CNPH*3017A**	58CV(A,X)135−22	28,000	12.5	15.0	28,200	3 86	8.2	16,700	2.62
3645606	25HBC530A**30	CNPH*3017A**	58CV(A,X)155−22	28,000	12.5	15.0	28,000	3 86	8.2	16,700	2.62
3756335	25HBC530A**30	CNPH*3017A**	58HDV040−−12	28,000	12.0	14.0	28,600	3.78	8.2	17,100	2.56
3756336	25HBC530A**30	CNPH*3017A**	58HDV060−−12	28,000	12.2	14.5	28,600	3 82	8.2	17,100	2.58
3645614	25HBC530A**30	CNPH*3017A**	58ME(B,C)040−12	28,200	12.5	15.0	28,400	3 92	8.3	16,800	2.64
3645624	25HBC530A**30	CNPH*3017A**	58ME(B,C)060−12	28,200	12.5	15.0	28,400	3 92	8.3	16,900	2.64
3645634	25HBC530A**30	CNPH*3017A**	58ME(B,C)080−12	28,200	12.5	15.0	28,200	3 90	8.3	16,800	2.64
3645644	25HBC530A**30	CNPH*3017A**	58ME(B,C)080−16	28,200	12.5	15.0	28,600	3 94	8.4	17,000	2.64
3646411	25HBC530A**30	CNPH*3017A**	58MEB040−12	28,200	12.5	15.0	28,400	3 92	8.3	16,800	2.64
3645654	25HBC530A**30	CNPH*3017A**	58MV(B,C)060−14	28,000	12.5	15.0	28,200	3 88	8.2	16,800	2.62
3645663	25HBC530A**30	CNPH*3017A**	58MV(B,C)080−14	27,800	12.0	14.5	28,000	3 80	8.1	16,700	2.58
3645670	25HBC530A**30	CNPH*3017A**	58MV(B,C)080−20	28,000	12.0	14.5	28,200	3 82	8.1	16,700	2.60
3645676	25HBC530A**30	CNPH*3017A**	58MV(B,C)100−20	27,800	12.0	14.5	28,000	3.78	8.0	16,600	2.58
3645681	25HBC530A**30	CNPH*3017A**	58MV(B,C)120−20	28,000	12.5	15.0	28,200	3 86	8.2	16,700	2.62
3645685	25HBC530A**30	CNPH*3017A**	58MVB040−14	27,800	12.0	14.5	28,200	3 80	8.1	16,800	2.58
3645691	25HBC530A**30	CNPH*3017A**	58PH*070−16	28,000	12.0	14.5	28,400	3 84	8.2	17,000	2.60
3645700	25HBC530A**30	CNPH*3017A**	58PH*090−16	28,000	12.0	14.5	28,400	3 86	8.2	16,900	2.62
3810499	25HBC530A**30	CNPH*3017A**	58VLR105−12	28,000	12.5	15.0	28,400	3 86	8.4	16,900	2.60
3810498	25HBC530A**30	CNPH*3017A**	58VMR105−12	27,800	12.5	15.0	28,000	3.78	8.2	16,600	2.58
4804624	25HBC530A**30	CNPH*3017A**	59*N*A060V17**14	27,800	12.0	14.5	28,400	3.78	8.2	16,900	2.56
4804625	25HBC530A**30	CNPH*3017A**	59*N*A080V17**14	28,000	12.0	14.5	28,400	3 82	8.2	16,900	2.58
4804626	25HBC530A**30	CNPH*3017A**	59*N*A100V21**20	28,200	12.0	14.5	28,400	3 86	8.2	16,900	2.60
4804627	25HBC530A**30	CNPH*3017A**	59*N*A120V24**22	28,200	12.5	15.0	28,200	3 86	8.2	16,800	2.62
4804628	25HBC530A**30	CNPH*3017A**	59*P5A060E17**14	28,000	12.0	14.5	28,400	3 82	8.2	17,000	2.58
4804629	25HBC530A**30	CNPH*3017A**	59*P5A080E17**16	28,200	12.0	14.5	28,600	3 88	8.2	17,100	2.60
4194193	25HBC530A**30	CNPH*3017A**	OVLAAB036098	28,000	12.0	14.5	28,400	3 80	8.2	16,900	2.58
4194195	25HBC530A**30	CNPH*3017A**	OVLAAB048112	28,200	12.0	14.5	28,400	3 88	8.4	17,000	2.60
4194192	25HBC530A**30	CNPH*3017A**	OVMAAB036098	28,000	12.0	14.5	28,400	3 80	8.2	17,000	2.58
4194194	25HBC530A**30	CNPH*3017A**	OVMAAB042112	28,000	12.5	15.0	28,200	3 86	8.4	16,800	2.62
3645712	25HBC530A**30	CNPH*3017A**+TDR		28,000	11.2	13.0	29,200	3.74	8.0	17,700	2.50
3756337	25HBC530A**30	CNPH*3117A**	58HDV040−−12	28,600	12.2	14.5	28,800	3 94	8.5	17,200	2.62
3756338	25HBC530A**30	CNPH*3117A**	58HDV060−−12	28,800	12.2	14.5	29,000	4 02	8.5	17,300	2.64
3810501	25HBC530A**30	CNPH*3117A**	58VLR105−12	28,800	12.5	15.0	28,600	4 02	8.5	17,000	2.68
3810500	25HBC530A**30	CNPH*3117A**	58VMR105−12	28,400	12.5	15.0	28,200	3 94	8.5	16,700	2.64
4804630	25HBC530A**30	CNPH*3117A**	59*N*A060V17**14	28,400	12.0	14.5	28,600	3 94	8.5	17,000	2.62
4804631	25HBC530A**30	CNPH*3117A**	59*N*A080V17**14	28,600	12.5	15.0	28,600	4 00	8.5	17,000	2.66
4804632	25HBC530A**30	CNPH*3117A**	59*N*A100V21**20	28,800	12.5	15.2	28,600	4 04	8.5	17,100	2.68
4804633	25HBC530A**30	CNPH*3117A**	59*N*A120V24**22	28,800	12.5	15.2	28,600	4 04	8.5	16,900	2.68
4804634	25HBC530A**30	CNPH*3117A**	59*P5A040E14**10	28,400	11.0	13.0	29,600	3.76	8.2	18,000	2.48
4804635	25HBC530A**30	CNPH*3117A**	59*P5A060E17**14	28,800	12.0	14.5	28,800	4 00	8.5	17,200	2.66
4804636	25HBC530A**30	CNPH*3117A**	59*P5A080E17**16	29,000	12.5	15.0	29,000	4 08	8.5	17,300	2.68
4194197	25HBC530A**30	CNPH*3117A**	OVLAAB036098	28,600	12.5	15.0	28,600	3 98	8.5	17,000	2.64
4194199	25HBC530A**30	CNPH*3117A**	OVLAAB048112	28,800	12.5	15.0	28,800	4 06	8.5	17,100	2.68
4194196	25HBC530A**30	CNPH*3117A**	OVMAAB036098	28,600	12.5	14.5	28,800	3 98	8.5	17,100	2.64
4194198	25HBC530A**30	CNPH*3117A**	OVMAAB042112	28,800	12.5	15.0	28,600	4 04	8.5	16,900	2.68

See notes on page 36

COMBINATION RATINGS CONTINUED

AHRI Ref. No.	Model Number	Coil Model Number	Furnace Model Number	Cooling Capacity	EER	SEER	High Temp		HSPF	Low Temp	
							E Capacity	E COP		H Capacity	H COP
3645582	25HBC530A**30	CNPH*3617A**	58CV(A,X)070−12	28,000	12.0	14.5	28,200	3 82	8.1	16,800	2.60
3645589	25HBC530A**30	CNPH*3617A**	58CV(A,X)090−16	28,000	12.5	15.3	28,000	3 84	8.5	16,700	2.62
3645598	25HBC530A**30	CNPH*3617A**	58CV(A,X)110−20	28,000	12.5	15.0	28,200	3 86	8.5	16,700	2.62
3645603	25HBC530A**30	CNPH*3617A**	58CV(A,X)135−22	28,000	12.5	15.0	28,200	3 86	8.2	16,700	2.62
3645607	25HBC530A**30	CNPH*3617A**	58CV(A,X)155−22	28,000	12.5	15.0	28,000	3 86	8.2	16,700	2.62
3756339	25HBC530A**30	CNPH*3617A**	58HDV040−−12	28,000	12.0	14.0	28,600	3.78	8.2	17,100	2.56
3756340	25HBC530A**30	CNPH*3617A**	58HDV060−−12	28,000	12.2	14.5	28,600	3 82	8.2	17,100	2.58
4194178	25HBC530A**30	CNPH*3617A**	58HDV080−−20	28,400	12.5	14.5	28,600	3 92	8.5	17,100	2.64
3645615	25HBC530A**30	CNPH*3617A**	58ME(B,C)040−12	28,200	12.5	15.3	28,400	3 92	8.5	16,800	2.64
3645625	25HBC530A**30	CNPH*3617A**	58ME(B,C)060−12	28,200	12.5	15.3	28,400	3 92	8.5	16,900	2.64
3645635	25HBC530A**30	CNPH*3617A**	58ME(B,C)080−12	28,200	12.5	15.3	28,200	3 90	8.5	16,800	2.64
3645645	25HBC530A**30	CNPH*3617A**	58ME(B,C)080−16	28,200	12.5	15.0	28,600	3 94	8.6	17,000	2.64
3646412	25HBC530A**30	CNPH*3617A**	58MEB040−12	28,200	12.5	15.3	28,400	3 92	8.5	16,800	2.64
3645655	25HBC530A**30	CNPH*3617A**	58MV(B,C)060−14	28,000	12.5	15.3	28,200	3 88	8.5	16,800	2.62
3645664	25HBC530A**30	CNPH*3617A**	58MV(B,C)080−14	27,800	12.5	15.0	28,000	3 80	8.1	16,700	2.58
3645671	25HBC530A**30	CNPH*3617A**	58MV(B,C)080−20	28,000	12.5	15.0	28,200	3 82	8.1	16,700	2.60
3645677	25HBC530A**30	CNPH*3617A**	58MV(B,C)100−20	27,800	12.5	15.0	28,000	3.78	8.2	16,600	2.58
3645682	25HBC530A**30	CNPH*3617A**	58MV(B,C)120−20	28,000	12.5	15.0	28,200	3 86	8.2	16,700	2.62
3645686	25HBC530A**30	CNPH*3617A**	58MVB040−14	27,800	12.0	14.5	28,200	3 80	8.1	16,800	2.58
3645692	25HBC530A**30	CNPH*3617A**	58PH*070−16	28,000	12.0	14.5	28,400	3 84	8.3	17,000	2.60
3645701	25HBC530A**30	CNPH*3617A**	58PH*090−16	28,200	12.5	15.0	28,400	3 86	8.5	16,900	2.62
3810503	25HBC530A**30	CNPH*3617A**	58VLR105−12	28,000	12.5	15.0	28,400	3 86	8.4	16,900	2.60
3810502	25HBC530A**30	CNPH*3617A**	58VMR105−12	27,800	12.5	15.0	28,000	3.78	8.2	16,600	2.58
4804637	25HBC530A**30	CNPH*3617A**	59*N*A060V17**14	27,800	12.0	14.5	28,400	3.78	8.2	16,900	2.56
4804638	25HBC530A**30	CNPH*3617A**	59*N*A080V17**14	28,000	12.0	14.5	28,400	3 82	8.2	16,900	2.58
4804639	25HBC530A**30	CNPH*3617A**	59*N*A100V21**20	28,200	12.0	14.5	28,400	3 86	8.2	16,900	2.60
4804640	25HBC530A**30	CNPH*3617A**	59*N*A120V24**22	28,200	12.5	15.0	28,200	3 86	8.2	16,800	2.62
4804641	25HBC530A**30	CNPH*3617A**	59*P5A060E17**14	28,000	12.0	14.5	28,400	3 82	8.2	17,000	2.58
4804642	25HBC530A**30	CNPH*3617A**	59*P5A080E17**16	28,200	12.0	14.5	28,600	3 88	8.2	17,100	2.60
4194201	25HBC530A**30	CNPH*3617A**	OVLAAB036098	28,000	12.0	14.5	28,400	3 80	8.2	16,900	2.58
4194203	25HBC530A**30	CNPH*3617A**	OVLAAB048112	28,200	12.0	14.5	28,400	3 88	8.4	17,000	2.60
4194200	25HBC530A**30	CNPH*3617A**	OVMAAB036098	28,000	12.0	14.5	28,400	3 80	8.2	17,000	2.58
4194202	25HBC530A**30	CNPH*3617A**	OVMAAB042112	28,000	12.5	15.0	28,200	3 86	8.4	16,800	2.62
3645713	25HBC530A**30	CNPH*3617A**+TDR		28,000	11.2	13.5	29,200	3.74	8.2	17,700	2.50
3645583	25HBC530A**30	CNPV*3014A**	58CV(A,X)070−12	27,800	12.0	14.5	28,200	3.78	8.1	16,800	2.58
3645714	25HBC530A**30	CNPV*3014A**+TDR		28,000	11.2	13.0	29,200	3.74	8.0	17,700	2.50
3645590	25HBC530A**30	CNPV*3017A**	58CV(A,X)090−16	28,000	12.5	15.0	28,000	3 84	8.2	16,700	2.62
4194169	25HBC530A**30	CNPV*3017A**	58HDV040−−12	28,000	12.0	14.0	28,600	3.78	8.2	17,100	2.56
4194170	25HBC530A**30	CNPV*3017A**	58HDV060−−12	28,000	12.0	14.5	28,600	3 82	8.2	17,100	2.58
3645616	25HBC530A**30	CNPV*3017A**	58ME(B,C)040−12	28,200	12.5	15.0	28,400	3 92	8.3	16,800	2.64
3645626	25HBC530A**30	CNPV*3017A**	58ME(B,C)060−12	28,200	12.5	15.0	28,400	3 92	8.3	16,900	2.64
3645636	25HBC530A**30	CNPV*3017A**	58ME(B,C)080−12	28,200	12.5	15.0	28,200	3 90	8.3	16,800	2.64
3645646	25HBC530A**30	CNPV*3017A**	58ME(B,C)080−16	28,200	12.5	15.0	28,600	3 94	8.4	17,000	2.64
3646413	25HBC530A**30	CNPV*3017A**	58MEB040−12	28,200	12.5	15.0	28,400	3 92	8.3	16,800	2.64
3645656	25HBC530A**30	CNPV*3017A**	58MV(B,C)060−14	28,000	12.5	15.0	28,200	3 88	8.2	16,800	2.62
3645693	25HBC530A**30	CNPV*3017A**	58PH*070−16	28,000	12.0	14.5	28,400	3 84	8.2	17,000	2.60
3645748	25HBC530A**30	CNPV*3017A**	58UVB060−14	28,000	12.5	15.0	28,200	3 88	8.2	16,800	2.62
3810491	25HBC530A**30	CNPV*3017A**	58VLR105−12	28,000	12.5	15.0	28,400	3 86	8.4	16,900	2.60
3810490	25HBC530A**30	CNPV*3017A**	58VMR105−12	27,800	12.5	15.0	28,000	3.78	8.2	16,600	2.58
4804601	25HBC530A**30	CNPV*3017A**	59*N*A060V17**14	27,800	12.0	14.5	28,400	3.78	8.2	16,900	2.56
4804602	25HBC530A**30	CNPV*3017A**	59*N*A080V17**14	28,000	12.0	14.5	28,400	3 82	8.2	16,900	2.58
4804603	25HBC530A**30	CNPV*3017A**	59*P5A060E17**14	28,000	12.0	14.5	28,400	3 82	8.2	17,000	2.58
4804604	25HBC530A**30	CNPV*3017A**	59*P5A080E17**16	28,200	12.0	14.5	28,600	3 88	8.2	17,100	2.60
4194180	25HBC530A**30	CNPV*3017A**	OVLAAB036098	28,000	12.0	14.5	28,400	3 80	8.2	16,900	2.58
4194179	25HBC530A**30	CNPV*3017A**	OVMAAB036098	28,000	12.0	14.5	28,400	3 80	8.2	17,000	2.58
4194181	25HBC530A**30	CNPV*3017A**	OVMAAB042112	28,000	12.5	15.0	28,200	3 86	8.4	16,800	2.62
3645715	25HBC530A**30	CNPV*3017A**+TDR		28,000	11.2	13.0	29,200	3.74	8.0	17,700	2.50
3645591	25HBC530A**30	CNPV*3117A**	58CV(A,X)090−16	28,600	12.5	15.5	28,400	4 02	8.6	16,800	2.68
4194171	25HBC530A**30	CNPV*3117A**	58HDV040−−12	28,600	12.0	14.5	28,800	3 96	8.5	17,200	2.62
4194172	25HBC530A**30	CNPV*3117A**	58HDV060−−12	28,800	12.5	14.5	29,000	4 02	8.5	17,300	2.64
3645617	25HBC530A**30	CNPV*3117A**	58ME(B,C)040−12	29,000	13.0	15.5	28,600	4.12	8.8	17,000	2.72
3645627	25HBC530A**30	CNPV*3117A**	58ME(B,C)060−12	29,000	12.5	15.5	28,800	4.14	8.8	17,100	2.72
3645637	25HBC530A**30	CNPV*3117A**	58ME(B,C)080−12	29,000	12.5	15.5	28,600	4.10	8.8	17,000	2.70
3645647	25HBC530A**30	CNPV*3117A**	58ME(B,C)080−16	29,200	12.5	15.3	28,800	4.14	8.8	17,200	2.72
3646414	25HBC530A**30	CNPV*3117A**	58MEB040−12	29,000	13.0	15.5	28,600	4.12	8.8	17,000	2.72
3645657	25HBC530A**30	CNPV*3117A**	58MV(B,C)060−14	28,800	12.5	15.5	28,600	4 04	8.6	16,900	2.68
3645694	25HBC530A**30	CNPV*3117A**	58PH*070−16	28,800	12.5	15.0	28,800	4 02	8.6	17,100	2.66
3645749	25HBC530A**30	CNPV*3117A**	58UVB060−14	28,800	12.5	15.5	28,600	4 04	8.6	16,900	2.68
3810493	25HBC530A**30	CNPV*3117A**	58VLR105−12	28,800	12.5	15.0	28,600	4 02	8.5	17,000	2.68
3810492	25HBC530A**30	CNPV*3117A**	58VMR105−12	28,400	12.5	15.0	28,200	3 94	8.5	16,700	2.64
4804605	25HBC530A**30	CNPV*3117A**	59*N*A060V17**14	28,400	12.0	14.5	28,600	3 94	8.5	17,000	2.62
4804606	25HBC530A**30	CNPV*3117A**	59*N*A080V17**14	28,600	12.5	15.0	28,600	4 00	8.5	17,000	2.66
4804607	25HBC530A**30	CNPV*3117A**	59*P5A040E14**10	28,400	11.0	13.0	29,600	3.76	8.2	18,100	2.48
4804608	25HBC530A**30	CNPV*3117A**	59*P5A060E17**14	28,800	12.0	14.5	28,800	4 00	8.5	17,200	2.66
4804609	25HBC530A**30	CNPV*3117A**	59*P5A080E17**16	29,000	12.5	15.0	29,000	4 08	8.5	17,300	2.68
4194183	25HBC530A**30	CNPV*3117A**	OVLAAB036098	28,600	12.5	15.0	28,600	3 98	8.5	17,000	2.64
4194182	25HBC530A**30	CNPV*3117A**	OVMAAB036098	28,600	12.5	14.5	28,800	3 98	8.5	17,100	2.64
4194184	25HBC530A**30	CNPV*3117A**	OVMAAB042112	28,800	12.5	15.0	28,600	4 04	8.5	16,900	2.68
3645716	25HBC530A**30	CNPV*3117A**+TDR		28,800	11.5	13.5	29,600	3 90	8.3	17,800	2.56
3645592	25HBC530A**30	CNPV*3617A**	58CV(A,X)090−16	28,000	12.5	15.3	28,000	3 84	8.5	16,700	2.62

See notes on page 36

COMBINATION RATINGS CONTINUED

AHRI Ref. No.	Model Number	Coil Model Number	Furnace Model Number	Cooling Capacity	EER	SEER	High Temp		HSPF	Low Temp	
							E Capacity	E COP		H Capacity	H COP
4194173	25HBC530A**30	CNPV*3617A**	58HDV040– –12	28,000	12.0	14.0	28,600	3.78	8.2	17,100	2.56
4194174	25HBC530A**30	CNPV*3617A**	58HDV060– –12	28,000	12.0	14.5	28,600	3 82	8.2	17,100	2.58
3645618	25HBC530A**30	CNPV*3617A**	58ME(B,C)040–12	28,200	12.5	15.3	28,400	3 92	8.5	16,800	2.64
3645628	25HBC530A**30	CNPV*3617A**	58ME(B,C)060–12	28,200	12.5	15.3	28,400	3 92	8.5	16,900	2.64
3645638	25HBC530A**30	CNPV*3617A**	58ME(B,C)080–12	28,200	12.5	15.3	28,200	3 90	8.5	16,800	2.64
3645648	25HBC530A**30	CNPV*3617A**	58ME(B,C)080–16	28,200	12.5	15.0	28,600	3 94	8.6	17,000	2.64
3646415	25HBC530A**30	CNPV*3617A**	58MEB040–12	28,200	12.5	15.3	28,400	3 92	8.5	16,800	2.64
3645658	25HBC530A**30	CNPV*3617A**	58MV(B,C)060–14	28,000	12.5	15.3	28,200	3 88	8.5	16,800	2.62
3645695	25HBC530A**30	CNPV*3617A**	58PH*070–16	28,000	12.0	14.5	28,400	3 84	8.3	17,000	2.60
3645750	25HBC530A**30	CNPV*3617A**	58UVB060–14	28,000	12.5	15.3	28,200	3 88	8.5	16,800	2.62
3810495	25HBC530A**30	CNPV*3617A**	58VLR105–12	28,000	12.5	15.0	28,400	3 86	8.4	16,900	2.60
3810494	25HBC530A**30	CNPV*3617A**	58VMR105–12	27,800	12.5	15.0	28,000	3.78	8.2	16,600	2.58
4804610	25HBC530A**30	CNPV*3617A**	59*N*A060V17**14	27,800	12.0	14.5	28,400	3.78	8.2	16,900	2.56
4804611	25HBC530A**30	CNPV*3617A**	59*N*A080V17**14	28,000	12.0	14.5	28,400	3 82	8.2	16,900	2.58
4804612	25HBC530A**30	CNPV*3617A**	59*P5A060E17**14	28,000	12.0	14.5	28,400	3 82	8.2	17,000	2.58
4804613	25HBC530A**30	CNPV*3617A**	59*P5A080E17**16	28,200	12.0	14.5	28,600	3 88	8.2	17,100	2.60
4194186	25HBC530A**30	CNPV*3617A**	OVLAAB036098	28,000	12.0	14.5	28,400	3 80	8.2	16,900	2.58
4194185	25HBC530A**30	CNPV*3617A**	OVMAAB036098	28,000	12.0	14.5	28,400	3 80	8.2	17,000	2.58
4194187	25HBC530A**30	CNPV*3617A**	OVMAAB042112	28,000	12.5	15.0	28,200	3 86	8.4	16,800	2.62
3645717	25HBC530A**30	CNPV*3617A**+TDR		28,000	11.2	13.5	29,200	3.74	8.2	17,700	2.50
3645599	25HBC530A**30	CNPV*3621A**	58CV(A,X)110–20	28,000	12.5	15.0	28,200	3 86	8.5	16,700	2.62
4194175	25HBC530A**30	CNPV*3621A**	58HDV040– –12	28,000	12.0	14.0	28,600	3.78	8.2	17,100	2.56
4194176	25HBC530A**30	CNPV*3621A**	58HDV060– –12	28,200	12.0	14.5	28,600	3 84	8.2	17,100	2.58
4194177	25HBC530A**30	CNPV*3621A**	58HDV080– –20	28,400	12.5	14.5	28,600	3 92	8.5	17,100	2.64
3645665	25HBC530A**30	CNPV*3621A**	58MV(B,C)080–14	27,800	12.5	15.0	28,000	3 80	8.1	16,700	2.58
3645672	25HBC530A**30	CNPV*3621A**	58MV(B,C)080–20	28,000	12.5	15.0	28,200	3 82	8.1	16,700	2.60
3645678	25HBC530A**30	CNPV*3621A**	58MV(B,C)100–20	27,800	12.5	15.0	28,000	3.78	8.2	16,600	2.58
3645702	25HBC530A**30	CNPV*3621A**	58PH*090–16	28,200	12.5	15.0	28,400	3 88	8.5	16,900	2.62
3645751	25HBC530A**30	CNPV*3621A**	58UVB080–14	27,800	12.5	15.0	28,000	3 80	8.1	16,700	2.58
3645752	25HBC530A**30	CNPV*3621A**	58UVB080–20	28,000	12.5	15.0	28,200	3 82	8.1	16,700	2.60
3645753	25HBC530A**30	CNPV*3621A**	58UVB100–20	27,800	12.5	15.0	28,000	3.78	8.2	16,600	2.58
4804614	25HBC530A**30	CNPV*3621A**	59*N*A060V17**14	27,800	12.0	14.5	28,400	3.78	8.2	16,900	2.56
4804615	25HBC530A**30	CNPV*3621A**	59*N*A080V17**14	28,000	12.0	14.5	28,400	3 82	8.2	16,900	2.60
4804616	25HBC530A**30	CNPV*3621A**	59*N*A100V21**20	28,200	12.0	14.5	28,400	3 86	8.2	16,900	2.60
4804617	25HBC530A**30	CNPV*3621A**	59*P5A060E17**14	28,000	12.0	14.5	28,400	3 82	8.2	17,000	2.58
4804618	25HBC530A**30	CNPV*3621A**	59*P5A080E17**16	28,400	12.0	14.5	28,600	3 88	8.2	17,100	2.60
4194189	25HBC530A**30	CNPV*3621A**	OVLAAB036098	28,000	12.0	14.5	28,400	3 82	8.2	16,900	2.58
4194191	25HBC530A**30	CNPV*3621A**	OVLAAB048112	28,200	12.0	14.5	28,400	3 88	8.4	17,000	2.62
4194188	25HBC530A**30	CNPV*3621A**	OVMAAB036098	28,000	12.0	14.5	28,400	3 80	8.2	17,000	2.58
4194190	25HBC530A**30	CNPV*3621A**	OVMAAB042112	28,200	12.5	15.0	28,200	3 88	8.4	16,800	2.62
3645718	25HBC530A**30	CNPV*3621A**+TDR		28,000	11.2	13.5	29,200	3.74	8.2	17,700	2.50
3645593	25HBC530A**30	CNPV*3717A**	58CV(A,X)090–16	29,000	13.0	15.5	28,400	4.14	8.8	16,800	2.72
3645619	25HBC530A**30	CNPV*3717A**	58ME(B,C)040–12	29,000	13.0	15.5	28,600	4 24	9.0	17,100	2.76
3645629	25HBC530A**30	CNPV*3717A**	58ME(B,C)060–12	29,000	13.0	15.5	28,600	4 24	9.0	17,100	2.76
3645639	25HBC530A**30	CNPV*3717A**	58ME(B,C)080–12	29,400	13.0	15.5	28,600	4 22	9.0	17,000	2.74
3645649	25HBC530A**30	CNPV*3717A**	58ME(B,C)080–16	29,600	13.0	15.5	28,800	4 24	9.0	17,200	2.76
3646416	25HBC530A**30	CNPV*3717A**	58MEB040–12	29,000	13.0	15.5	28,600	4 24	9.0	17,100	2.76
3645659	25HBC530A**30	CNPV*3717A**	58MV(B,C)060–14	29,000	13.0	15.5	28,600	4.16	8.8	16,900	2.72
3645696	25HBC530A**30	CNPV*3717A**	58PH*070–16	29,200	12.5	15.3	28,800	4.14	8.8	17,200	2.70
3645754	25HBC530A**30	CNPV*3717A**	58UVB060–14	29,000	13.0	15.5	28,600	4.16	8.8	16,900	2.72
3810497	25HBC530A**30	CNPV*3717A**	58VLR105–12	29,000	12.5	15.0	28,600	4.14	8.5	17,000	2.70
3810496	25HBC530A**30	CNPV*3717A**	58VMR105–12	28,600	12.5	15.0	28,400	4 04	8.5	16,800	2.68
4804619	25HBC530A**30	CNPV*3717A**	59*N*A060V17**14	28,800	12.5	15.0	28,800	4 06	8.5	17,100	2.66
4804620	25HBC530A**30	CNPV*3717A**	59*N*A080V17**14	29,000	12.5	15.2	28,600	4.12	8.8	17,100	2.68
4804621	25HBC530A**30	CNPV*3717A**	59*P5A040E14**10	28,800	11.0	13.0	29,600	3 84	8.2	18,200	2.50
4804622	25HBC530A**30	CNPV*3717A**	59*P5A060E17**14	29,200	12.5	15.0	28,800	4.12	8.8	17,200	2.68
4804623	25HBC530A**30	CNPV*3717A**	59*P5A080E17**16	29,400	12.5	15.2	28,800	4.16	8.8	17,300	2.70
3645719	25HBC530A**30	CNPV*3717A**+TDR		29,000	11.5	14.0	29,400	3 96	8.4	17,900	2.58
3645666	25HBC530A**30	CNPV*4221A**	58MV(B,C)080–14	28,000	12.5	15.0	28,200	3 86	8.2	16,700	2.62
3645755	25HBC530A**30	CNPV*4221A**	58UVB080–14	28,000	12.5	15.0	28,200	3 86	8.2	16,700	2.62
3645584	25HBC530A**30	CSPH*3012A**	58CV(A,X)070–12	28,000	12.0	14.5	28,200	3 82	8.1	16,800	2.60
3645594	25HBC530A**30	CSPH*3012A**	58CV(A,X)090–16	28,000	12.5	15.0	28,200	3 86	8.2	16,700	2.62
3645600	25HBC530A**30	CSPH*3012A**	58CV(A,X)110–20	28,000	12.5	15.0	28,200	3 86	8.2	16,800	2.62
3645604	25HBC530A**30	CSPH*3012A**	58CV(A,X)135–22	28,000	12.5	15.0	28,200	3 86	8.2	16,700	2.62
3645608	25HBC530A**30	CSPH*3012A**	58CV(A,X)155–22	28,000	12.5	15.0	28,200	3 88	8.2	16,700	2.62
3756341	25HBC530A**30	CSPH*3012A**	58HDV040– –12	28,000	12.0	14.0	28,600	3.76	8.0	17,100	2.54
3756342	25HBC530A**30	CSPH*3012A**	58HDV060– –12	28,200	12.0	14.0	28,600	3 82	8.2	17,100	2.56
3645620	25HBC530A**30	CSPH*3012A**	58ME(B,C)040–12	28,200	12.5	15.0	28,400	3 92	8.3	16,800	2.64
3645630	25HBC530A**30	CSPH*3012A**	58ME(B,C)060–12	28,200	12.5	15.0	28,400	3 92	8.3	16,900	2.64
3645640	25HBC530A**30	CSPH*3012A**	58ME(B,C)080–12	28,200	12.5	15.0	28,200	3 90	8.3	16,800	2.64
3645650	25HBC530A**30	CSPH*3012A**	58ME(B,C)080–16	28,200	12.0	14.5	28,600	3 92	8.3	17,000	2.64
3646417	25HBC530A**30	CSPH*3012A**	58MEB040–12	28,200	12.5	15.0	28,400	3 92	8.3	16,800	2.64
3645660	25HBC530A**30	CSPH*3012A**	58MV(B,C)060–14	28,000	12.5	15.0	28,400	3 88	8.2	16,800	2.62
3645667	25HBC530A**30	CSPH*3012A**	58MV(B,C)080–14	27,800	12.0	14.5	28,200	3 80	8.1	16,800	2.58
3645673	25HBC530A**30	CSPH*3012A**	58MV(B,C)080–20	28,000	12.0	14.5	28,200	3 84	8.1	16,800	2.60
3645679	25HBC530A**30	CSPH*3012A**	58MV(B,C)100–20	27,800	12.0	14.5	28,000	3.78	8.0	16,700	2.58
3645683	25HBC530A**30	CSPH*3012A**	58MV(B,C)120–20	28,000	12.5	15.0	28,200	3 86	8.2	16,700	2.62
3645687	25HBC530A**30	CSPH*3012A**	58MVB040–14	27,800	12.0	14.5	28,200	3 82	8.1	16,800	2.58
3645697	25HBC530A**30	CSPH*3012A**	58PH*070–16	28,000	12.0	14.5	28,400	3 82	8.1	17,000	2.58
3645703	25HBC530A**30	CSPH*3012A**	58PH*090–16	28,000	12.0	14.5	28,400	3 86	8.2	16,900	2.60

See notes on page 36

COMBINATION RATINGS CONTINUED

AHRI Ref. No.	Model Number	Coil Model Number	Furnace Model Number	Cooling Capacity	EER	SEER	High Temp		HSPF	Low Temp	
							E Capacity	E COP		H Capacity	H COP
3810505	25HBC530A**30	CSPH*3012A**	58VLR105−12	28,200	12.5	14.5	28,400	3 86	8.4	16,900	2.60
3810504	25HBC530A**30	CSPH*3012A**	58VMR105−12	27,800	12.5	14.5	28,000	3.78	8.2	16,700	2.58
4804643	25HBC530A**30	CSPH*3012A**	59*N*A060V17**14	28,000	12.0	14.5	28,600	3 84	8.2	17,000	2.56
4804644	25HBC530A**30	CSPH*3012A**	59*N*A080V17**14	28,200	12.0	14.5	28,600	3 88	8.2	17,000	2.60
4804645	25HBC530A**30	CSPH*3012A**	59*N*A100V21**20	28,200	12.0	14.5	28,600	3 92	8.5	17,000	2.62
4804646	25HBC530A**30	CSPH*3012A**	59*N*A120V24**22	28,200	12.0	14.5	28,400	3 92	8.5	16,900	2.62
4804647	25HBC530A**30	CSPH*3012A**	59*P5A060E17**14	28,200	12.0	14.5	28,600	3 88	8.2	17,000	2.60
4804648	25HBC530A**30	CSPH*3012A**	59*P5A080E17**16	28,400	12.0	14.5	28,800	3 94	8.5	17,200	2.62
4194205	25HBC530A**30	CSPH*3012A**	OVLAAB036098	28,000	12.0	14.5	28,400	3 82	8.2	17,000	2.58
4194207	25HBC530A**30	CSPH*3012A**	OVLAAB048112	28,400	12.0	14.5	28,600	3 88	8.4	17,100	2.60
4194204	25HBC530A**30	CSPH*3012A**	OVMAAB036098	28,000	12.0	14.5	28,600	3 82	8.2	17,100	2.58
4194206	25HBC530A**30	CSPH*3012A**	OVMAAB042112	28,200	12.5	14.5	28,400	3 86	8.4	16,900	2.62
3645720	25HBC530A**30	CSPH*3012A**+TDR		28,000	11.2	13.0	29,200	3.76	8.0	17,700	2.52
3645585	25HBC530A**30	CSPH*3612A**	58CV(A,X)070−12	28,000	12.0	14.5	28,400	3 94	8.2	16,900	2.64
3645595	25HBC530A**30	CSPH*3612A**	58CV(A,X)090−16	28,000	12.5	15.3	28,200	3 98	8.5	16,800	2.66
3645601	25HBC530A**30	CSPH*3612A**	58CV(A,X)110−20	28,000	12.5	15.0	28,400	3 98	8.5	16,800	2.66
3645605	25HBC530A**30	CSPH*3612A**	58CV(A,X)135−22	28,000	12.5	15.0	28,400	4 00	8.3	16,800	2.68
3645609	25HBC530A**30	CSPH*3612A**	58CV(A,X)155−22	28,000	12.5	15.0	28,200	4 00	8.3	16,800	2.68
3756343	25HBC530A**30	CSPH*3612A**	58HDV040−−12	28,000	12.0	14.0	28,600	3 92	8.2	17,200	2.60
3756344	25HBC530A**30	CSPH*3612A**	58HDV060−−12	28,200	12.2	14.5	28,600	3 98	8.2	17,300	2.64
3645621	25HBC530A**30	CSPH*3612A**	58ME(B,C)040−12	28,200	12.5	15.3	28,600	4 08	8.5	17,000	2.70
3645631	25HBC530A**30	CSPH*3612A**	58ME(B,C)060−12	28,200	12.5	15.3	28,600	4 08	8.5	17,000	2.70
3645641	25HBC530A**30	CSPH*3612A**	58ME(B,C)080−12	28,200	12.5	15.3	28,600	4 06	8.5	16,900	2.70
3645651	25HBC530A**30	CSPH*3612A**	58ME(B,C)080−16	28,200	12.5	15.0	28,800	4.10	8.6	17,100	2.70
3646418	25HBC530A**30	CSPH*3612A**	58MEB040−12	28,200	12.5	15.3	28,600	4 08	8.5	17,000	2.70
3645661	25HBC530A**30	CSPH*3612A**	58MV(B,C)060−14	28,000	12.5	15.3	28,400	4 00	8.5	16,900	2.68
3645668	25HBC530A**30	CSPH*3612A**	58MV(B,C)080−14	28,000	12.5	15.0	28,200	3 92	8.2	16,800	2.64
3645674	25HBC530A**30	CSPH*3612A**	58MV(B,C)080−20	28,000	12.5	15.0	28,400	3 96	8.3	16,800	2.66
3645680	25HBC530A**30	CSPH*3612A**	58MV(B,C)100−20	27,800	12.5	15.0	28,200	3 90	8.2	16,700	2.62
3645684	25HBC530A**30	CSPH*3612A**	58MV(B,C)120−20	28,000	12.5	15.0	28,400	3 98	8.3	16,800	2.68
3645688	25HBC530A**30	CSPH*3612A**	58MVB040−14	28,000	12.0	14.5	28,400	3 92	8.2	16,900	2.64
3645698	25HBC530A**30	CSPH*3612A**	58PH*070−16	28,200	12.0	14.5	28,600	3 98	8.3	17,100	2.64
3645704	25HBC530A**30	CSPH*3612A**	58PH*090−16	28,200	12.5	15.0	28,600	4 02	8.5	17,000	2.68
3810507	25HBC530A**30	CSPH*3612A**	58VLR105−12	28,600	12.5	15.0	28,600	3 98	8.5	16,900	2.66
3810506	25HBC530A**30	CSPH*3612A**	58VMR105−12	28,200	12.5	15.0	28,200	3 90	8.4	16,700	2.62
4804649	25HBC530A**30	CSPH*3612A**	59*N*A060V17**14	28,400	12.0	14.5	28,600	3 90	8.2	17,000	2.62
4804650	25HBC530A**30	CSPH*3612A**	59*N*A080V17**14	28,600	12.5	15.0	28,600	3 96	8.5	17,000	2.64
4804651	25HBC530A**30	CSPH*3612A**	59*N*A100V21**20	28,800	12.5	15.0	28,600	4 00	8.5	17,000	2.66
4804652	25HBC530A**30	CSPH*3612A**	59*N*A120V24**22	28,800	12.5	15.2	28,400	4 00	8.5	16,900	2.66
4804653	25HBC530A**30	CSPH*3612A**	59*P5A040E14**10	28,400	11.0	13.0	29,600	3.72	8.0	18,000	2.48
4804654	25HBC530A**30	CSPH*3612A**	59*P5A060E17**14	28,800	12.0	14.5	28,800	3 96	8.5	17,100	2.64
4804655	25HBC530A**30	CSPH*3612A**	59*P5A080E17**16	29,000	12.5	15.0	28,800	4 02	8.5	17,200	2.66
4194209	25HBC530A**30	CSPH*3612A**	OVLAAB036098	28,600	12.5	15.0	28,600	3 94	8.5	17,000	2.64
4194211	25HBC530A**30	CSPH*3612A**	OVLAAB048112	28,800	12.5	15.0	28,600	4 02	8.5	17,100	2.66
4194208	25HBC530A**30	CSPH*3612A**	OVMAAB036098	28,600	12.5	14.5	28,600	3 94	8.5	17,100	2.62
4194210	25HBC530A**30	CSPH*3612A**	OVMAAB042112	28,800	12.5	15.0	28,400	4 00	8.5	16,900	2.68
3645721	25HBC530A**30	CSPH*3612A**+TDR		28,000	11.2	13.5	29,200	3 86	8.2	17,800	2.56
3810482	25HBC530A**30	FB4CNF030		28,200	12.0	14.0	28,600	3 88	8.4	17,100	2.60
3645722	25HBC530A**30	FB4CNF030+TXV		28,200	12.0	14.5	28,600	3 88	8.3	17,100	2.60
3810483	25HBC530A**30	FB4CNF036		28,200	12.0	14.0	28,600	3 88	8.4	17,100	2.60
3645723	25HBC530A**30	FB4CNF036+TXV		28,200	12.0	14.5	28,600	3 88	8.3	17,100	2.60
3645724	25HBC530A**30	FE4AN(B,F)003+UI		28,400	12.5	15.5	28,000	3 94	8.6	16,600	2.66
3645725	25HBC530A**30	FE4AN(B,F)005+UI		29,000	13.0	16.0	28,000	4.16	9.0	16,800	2.74
3645726	25HBC530A**30	FE4ANF002+UI		28,200	12.5	15.0	28,200	3 92	8.5	16,800	2.62
3645727	25HBC530A**30	FF1ENP030		27,600	11.2	13.5	29,000	3 68	8.0	17,500	2.48
3645728	25HBC530A**30	FF1ENP031		28,200	12.0	14.5	28,600	3 86	8.2	17,100	2.60
3645729	25HBC530A**30	FF1ENP036		28,200	11.2	13.5	29,200	3.74	8.0	17,600	2.52
3645730	25HBC530A**30	FF1ENP037		28,400	12.0	14.5	28,800	3 86	8.3	17,300	2.60
3645734	25HBC530A**30	FV4CN(B F)003		28,400	12.5	15.5	28,000	3 94	8.6	16,600	2.66
3645735	25HBC530A**30	FV4CN(B F)005		29,000	13.0	16.0	28,000	4.16	9.0	16,800	2.74
3645736	25HBC530A**30	FV4CNF002		28,200	12.5	15.3	28,200	3 92	8.5	16,800	2.62
3645740	25HBC530A**30	FX4DN(B,F)037		29,200	12.5	15.3	28,800	4.12	8.8	17,100	2.70
3810484	25HBC530A**30	FY5BNF030		28,400	12.0	13.5	28,800	3 88	8.4	17,300	2.60
3692771	25HBC530A**30	FY5BNF030+TXV		28,400	12.0	14.5	28,800	3 88	8.2	17,300	2.58
3810485	25HBC530A**30	FY5BNF036		28,200	11.5	13.5	29,000	3 82	8.2	17,400	2.56
3692772	25HBC530A**30	FY5BNF036+TXV		28,200	11.5	14.0	29,000	3 82	8.2	17,500	2.54
3645945	25HBC536A**30	†FX4DN(B,F)037		34,800	12.5	15.0	35,400	3 92	8.7	21,400	2.64
3645756	25HBC536A**30	CAP**3614A**	58CV(A,X)070−12	33,200	11.5	14.0	34,600	3 60	8.0	21,200	2.50
3645881	25HBC536A**30	CAP**3614A**	58PH*045−08	33,200	11.0	13.5	35,000	3 56	7.9	21,600	2.46
3645910	25HBC536A**30	CAP**3614A**+TDR		33,200	11.0	13.0	35,400	3 56	7.9	21,800	2.44
3645761	25HBC536A**30	CAP**3617A**	58CV(A,X)090−16	33,400	12.0	14.5	34,400	3 66	8.1	21,000	2.54
4194212	25HBC536A**30	CAP**3617A**	58HDV060−−12	33,400	11.5	13.5	35,200	3 64	8.2	21,600	2.50
3645793	25HBC536A**30	CAP**3617A**	58ME(B,C)040−12	33,600	12.0	14.5	34,600	3.72	8.2	21,200	2.56
3645801	25HBC536A**30	CAP**3617A**	58ME(B,C)060−12	33,600	12.0	14.0	34,800	3.72	8.2	21,200	2.56
3645809	25HBC536A**30	CAP**3617A**	58ME(B,C)080−12	33,600	12.0	14.5	34,600	3.70	8.1	21,000	2.56
3645817	25HBC536A**30	CAP**3617A**	58ME(B,C)080−16	33,600	12.0	14.0	34,800	3.72	8.2	21,200	2.56
3646419	25HBC536A**30	CAP**3617A**	58MEB040−12	33,600	12.0	14.5	34,600	3.72	8.2	21,200	2.56
3645833	25HBC536A**30	CAP**3617A**	58MV(B,C)060−14	33,600	12.0	14.0	34,600	3 68	8.1	21,200	2.54
3645886	25HBC536A**30	CAP**3617A**	58PH*070−16	33,400	11.5	14.0	34,800	3 64	8.0	21,400	2.50

See notes on page 36

COMBINATION RATINGS CONTINUED

AHRI Ref. No.	Model Number	Coil Model Number	Furnace Model Number	Cooling Capacity	EER	SEER	High Temp		HSPF	Low Temp	
							E Capacity	E COP		H Capacity	H COP
3645949	25HBC536A**30	CAP**3617A**	58UVB060−14	33,600	12.0	14.0	34,600	3 68	8.1	21,200	2.54
3810513	25HBC536A**30	CAP**3617A**	58VLR105−12	33,600	11.5	14.0	34,800	3 66	8.2	21,200	2.52
3810512	25HBC536A**30	CAP**3617A**	58VMR105−12	33,200	11.5	14.0	34,400	3 60	8.0	21,000	2.50
4804656	25HBC536A**30	CAP**3617A**	59*N*A060V17**14	33,000	11.5	14.0	34,400	3 54	8.0	21,000	2.46
4804657	25HBC536A**30	CAP**3617A**	59*N*A080V17**14	33,000	11.8	14.2	34,400	3 58	8.0	20,800	2.48
4804658	25HBC536A**30	CAP**3617A**	59*P5A060E17**14	33,400	11.5	14.0	34,800	3 62	8.0	21,400	2.50
4804659	25HBC536A**30	CAP**3617A**	59*P5A080E17**16	33,200	11.8	14.2	34,600	3 62	8.0	21,000	2.50
3645911	25HBC536A**30	CAP**3617A**+TDR		33,600	11.0	13.0	35,800	3 62	8.0	22,200	2.46
3645789	25HBC536A**30	CAP**3619A**	58HDV040−−12	33,200	11.0	13.5	35,200	3 56	7.9	21,600	2.46
3645790	25HBC536A**30	CAP**3619A**	58HDV060−−12	33,400	11.5	13.5	35,200	3 64	8.0	21,600	2.50
4804672	25HBC536A**30	CAP**3619A**	59*N*A060V17**14	33,000	11.5	14.0	34,400	3 54	8.0	21,000	2.46
4804673	25HBC536A**30	CAP**3619A**	59*N*A080V17**14	33,000	11.8	14.2	34,400	3 58	8.0	20,800	2.48
4804674	25HBC536A**30	CAP**3619A**	59*N*A100V21**20	33,200	11.8	14.2	34,400	3 62	8.0	21,000	2.50
4804675	25HBC536A**30	CAP**3619A**	59*P5A060E17**14	33,400	11.5	14.0	34,800	3 62	8.0	21,400	2.50
4804676	25HBC536A**30	CAP**3619A**	59*P5A080E17**16	33,200	11.8	14.2	34,600	3 62	8.0	21,000	2.50
3645912	25HBC536A**30	CAP**3619A**+TDR		33,600	11.0	13.0	35,800	3 62	8.0	22,200	2.46
3645769	25HBC536A**30	CAP**3621A**	58CV(A,X)110−20	33,400	12.0	14.5	34,400	3.70	8.1	21,000	2.56
4194213	25HBC536A**30	CAP**3621A**	58HDV040−−12	33,200	11.0	13.5	35,200	3 58	8.0	21,600	2.46
4194214	25HBC536A**30	CAP**3621A**	58HDV060−−12	33,600	11.5	13.5	35,200	3 66	8.2	21,600	2.52
4194215	25HBC536A**30	CAP**3621A**	58HDV080−−20	34,000	12.0	14.0	35,200	3.78	8.5	21,600	2.58
3645825	25HBC536A**30	CAP**3621A**	58ME(B,C)100−20	33,600	12.0	14.5	34,400	3.74	8.2	20,800	2.58
3645841	25HBC536A**30	CAP**3621A**	58MV(B,C)080−14	33,400	12.0	14.0	34,600	3 66	8.1	21,000	2.52
3645852	25HBC536A**30	CAP**3621A**	58MV(B,C)080−20	33,400	12.0	14.5	34,400	3 66	8.1	21,000	2.54
3645861	25HBC536A**30	CAP**3621A**	58MV(B,C)100−20	33,600	12.0	14.5	34,600	3.70	8.1	21,000	2.54
3645894	25HBC536A**30	CAP**3621A**	58PH*090−16	33,800	12.0	14.5	34,600	3.76	8.2	21,000	2.58
3645902	25HBC536A**30	CAP**3621A**	58PH*110−20	34,000	12.0	14.5	34,800	3 80	8.3	21,200	2.60
3645950	25HBC536A**30	CAP**3621A**	58UVB080−14	33,400	12.0	14.0	34,600	3 66	8.1	21,000	2.52
3645951	25HBC536A**30	CAP**3621A**	58UVB080−20	33,400	12.0	14.5	34,400	3 66	8.1	21,000	2.54
3645952	25HBC536A**30	CAP**3621A**	58UVB100−20	33,600	12.0	14.5	34,600	3.70	8.1	21,000	2.54
3810515	25HBC536A**30	CAP**3621A**	58VLR120−20	33,400	12.0	14.5	34,400	3.70	8.2	20,800	2.56
3810514	25HBC536A**30	CAP**3621A**	58VMR120−20	33,400	12.0	14.5	34,400	3 66	8.2	20,800	2.54
4804660	25HBC536A**30	CAP**3621A**	59*N*A060V17**14	33,000	11.8	14.2	34,400	3 56	8.0	20,800	2.48
4804661	25HBC536A**30	CAP**3621A**	59*N*A080V17**14	33,200	11.8	14.2	34,400	3 60	8.0	20,800	2.50
4804662	25HBC536A**30	CAP**3621A**	59*N*A100V21**20	33,200	11.8	14.2	34,400	3 64	8.2	21,000	2.52
4804663	25HBC536A**30	CAP**3621A**	59*P5A060E17**14	33,400	11.5	14.0	34,800	3 64	8.2	21,400	2.50
4804664	25HBC536A**30	CAP**3621A**	59*P5A080E17**16	33,400	11.8	14.2	34,600	3 64	8.2	21,000	2.52
3645913	25HBC536A**30	CAP**3621A**+TDR		33,600	11.0	13.0	35,800	3 62	8.0	22,200	2.46
3645770	25HBC536A**30	CAP**4221A**	58CV(A,X)110−20	33,800	12.0	14.5	34,600	3.74	8.2	21,000	2.58
4194216	25HBC536A**30	CAP**4221A**	58HDV040−−12	33,600	11.5	13.5	35,200	3 62	8.2	21,800	2.48
4194217	25HBC536A**30	CAP**4221A**	58HDV060−−12	33,800	11.5	13.5	35,200	3.70	8.2	21,600	2.54
4194218	25HBC536A**30	CAP**4221A**	58HDV080−−20	34,200	12.0	14.0	35,400	3 82	8.5	21,600	2.60
3645826	25HBC536A**30	CAP**4221A**	58ME(B,C)100−20	34,000	12.0	14.5	34,600	3.78	8.3	21,000	2.60
3645842	25HBC536A**30	CAP**4221A**	58MV(B,C)080−14	33,600	12.0	14.0	34,800	3.70	8.1	21,200	2.54
3645853	25HBC536A**30	CAP**4221A**	58MV(B,C)080−20	33,600	12.0	14.5	34,600	3.70	8.1	21,000	2.56
3645862	25HBC536A**30	CAP**4221A**	58MV(B,C)100−20	33,800	12.0	14.5	34,600	3.74	8.2	21,200	2.56
3645895	25HBC536A**30	CAP**4221A**	58PH*090−16	34,000	12.0	14.5	34,800	3 80	8.5	21,200	2.60
3645903	25HBC536A**30	CAP**4221A**	58PH*110−20	34,200	12.0	14.5	34,800	3 84	8.5	21,200	2.62
3645953	25HBC536A**30	CAP**4221A**	58UVB080−14	33,600	12.0	14.0	34,800	3.70	8.1	21,200	2.54
3645954	25HBC536A**30	CAP**4221A**	58UVB080−20	33,600	12.0	14.5	34,600	3.70	8.1	21,000	2.56
3645955	25HBC536A**30	CAP**4221A**	58UVB100−20	33,800	12.0	14.5	34,600	3.74	8.2	21,200	2.56
3810517	25HBC536A**30	CAP**4221A**	58VLR120−20	33,800	12.0	14.5	34,400	3.74	8.2	20,800	2.58
3810516	25HBC536A**30	CAP**4221A**	58VMR120−20	33,600	12.0	14.5	34,600	3.70	8.2	21,000	2.56
4804665	25HBC536A**30	CAP**4221A**	59*N*A060V17**14	33,200	11.8	14.2	34,600	3 60	8.0	21,000	2.50
4804666	25HBC536A**30	CAP**4221A**	59*N*A080V17**14	33,400	11.8	14.2	34,400	3 64	8.2	21,000	2.52
4804667	25HBC536A**30	CAP**4221A**	59*N*A100V21**20	33,600	12.0	14.5	34,600	3 68	8.2	21,000	2.54
4804668	25HBC536A**30	CAP**4221A**	59*P5A060E17**14	33,600	11.5	14.0	35,000	3 68	8.2	21,400	2.52
4804669	25HBC536A**30	CAP**4221A**	59*P5A080E17**16	33,600	11.8	14.2	34,600	3 68	8.2	21,200	2.54
3645914	25HBC536A**30	CAP**4221A**+TDR		33,800	11.2	13.0	35,800	3 66	8.2	22,200	2.48
3645777	25HBC536A**30	CAP**4224A**	58CV(A,X)135−22	33,800	12.0	14.5	34,400	3.76	8.2	20,800	2.58
3645783	25HBC536A**30	CAP**4224A**	58CV(A,X)155−22	33,800	12.5	15.0	34,400	3.78	8.3	20,800	2.60
3645791	25HBC536A**30	CAP**4224A**	58HDV100−−20	34,200	12.0	14.5	35,000	3 82	8.4	21,400	2.60
3645869	25HBC536A**30	CAP**4224A**	58MV(B,C)120−20	33,800	12.0	14.5	34,400	3.74	8.2	21,000	2.58
3645875	25HBC536A**30	CAP**4224A**	58MVB040−14	33,600	12.0	14.0	34,600	3 68	8.1	21,000	2.54
3645956	25HBC536A**30	CAP**4224A**	58UVB120−20	33,800	12.0	14.5	34,400	3.74	8.2	21,000	2.58
4804670	25HBC536A**30	CAP**4224A**	59*N*A100V21**20	33,600	12.0	14.5	34,600	3 68	8.2	21,000	2.54
4804671	25HBC536A**30	CAP**4224A**	59*N*A120V24**22	33,600	12.0	14.5	34,400	3.70	8.2	20,800	2.56
3645915	25HBC536A**30	CAP**4224A**+TDR		33,800	11.2	13.0	35,800	3 66	8.2	22,200	2.48
3645757	25HBC536A**30	CNPH*3617A**	58CV(A,X)070−12	33,200	11.5	14.0	34,600	3 60	7.9	21,000	2.50
3645762	25HBC536A**30	CNPH*3617A**	58CV(A,X)090−16	33,400	12.0	14.0	34,400	3 64	8.0	21,000	2.52
3645771	25HBC536A**30	CNPH*3617A**	58CV(A,X)110−20	33,400	12.0	14.0	34,400	3 66	8.0	21,000	2.52
3645778	25HBC536A**30	CNPH*3617A**	58CV(A,X)135−22	33,400	12.0	14.5	34,400	3 66	8.0	21,000	2.54
3645784	25HBC536A**30	CNPH*3617A**	58CV(A,X)155−22	33,400	12.0	14.5	34,400	3 68	8.1	20,800	2.54
3756345	25HBC536A**30	CNPH*3617A**	58HDV040−−12	33,000	11.2	13.0	34,800	3 54	8.0	21,600	2.44
3756346	25HBC536A**30	CNPH*3617A**	58HDV060−−12	33,400	11.5	13.5	34,800	3 60	8.0	21,600	2.48
3756347	25HBC536A**30	CNPH*3617A**	58HDV080−−20	33,800	11.5	14.0	34,800	3.70	8.2	21,600	2.54
3756348	25HBC536A**30	CNPH*3617A**	58HDV100−−20	33,600	12.0	14.0	34,800	3 68	8.2	21,200	2.54
3645794	25HBC536A**30	CNPH*3617A**	58ME(B,C)040−12	33,400	12.0	14.0	34,600	3 68	8.1	21,000	2.54
3645802	25HBC536A**30	CNPH*3617A**	58ME(B,C)060−12	33,600	12.0	14.0	34,600	3 68	8.1	21,200	2.54
3645810	25HBC536A**30	CNPH*3617A**	58ME(B,C)080−12	33,400	12.0	14.0	34,600	3 66	8.1	21,000	2.54
3645818	25HBC536A**30	CNPH*3617A**	58ME(B,C)080−16	33,400	12.0	14.0	34,600	3 68	8.1	21,200	2.54

See notes on page 36

COMBINATION RATINGS CONTINUED

AHRI Ref. No.	Model Number	Coil Model Number	Furnace Model Number	Cooling Capacity	EER	SEER	High Temp		HSPF	Low Temp	
							E Capacity	E COP		H Capacity	H COP
3645827	25HBC536A**30	CNPH*3617A**	58ME(B,C)100−20	33,400	12.0	14.5	34,400	3 66	8.1	20,800	2.54
3646420	25HBC536A**30	CNPH*3617A**	58MEB040−12	33,400	12.0	14.0	34,600	3 68	8.1	21,000	2.54
3645834	25HBC536A**30	CNPH*3617A**	58MV(B,C)060−14	33,400	12.0	14.0	34,600	3 66	8.1	21,200	2.52
3645843	25HBC536A**30	CNPH*3617A**	58MV(B,C)080−14	33,200	11.5	14.0	34,600	3 62	8.0	21,200	2.50
3645854	25HBC536A**30	CNPH*3617A**	58MV(B,C)080−20	33,200	11.5	14.0	34,400	3 62	8.0	21,000	2.50
3645863	25HBC536A**30	CNPH*3617A**	58MV(B,C)100−20	33,400	12.0	14.0	34,600	3 66	8.0	21,200	2.52
3645870	25HBC536A**30	CNPH*3617A**	58MV(B,C)120−20	33,400	12.0	14.0	34,400	3 64	8.0	21,000	2.52
3645876	25HBC536A**30	CNPH*3617A**	58MVB040−14	33,200	11.5	14.0	34,600	3 58	7.9	21,200	2.48
3645882	25HBC536A**30	CNPH*3617A**	58PH*045−08	33,200	11.2	13.5	35,000	3 56	7.8	21,600	2.46
3645887	25HBC536A**30	CNPH*3617A**	58PH*070−16	33,200	11.5	13.5	34,800	3 60	7.9	21,200	2.48
3645896	25HBC536A**30	CNPH*3617A**	58PH*090−16	33,400	12.0	14.5	34,600	3 68	8.1	21,000	2.54
3645904	25HBC536A**30	CNPH*3617A**	58PH*110−20	33,600	12.0	14.5	34,600	3.70	8.1	21,000	2.56
3810529	25HBC536A**30	CNPH*3617A**	58VLR105−12	33,400	11.5	14.0	34,800	3 64	8.2	21,400	2.52
3810531	25HBC536A**30	CNPH*3617A**	58VLR120−20	33,400	12.0	14.5	34,400	3 66	8.2	20,800	2.54
3810528	25HBC536A**30	CNPH*3617A**	58VMR105−12	33,000	11.5	14.0	34,400	3 58	8.0	21,000	2.48
3810530	25HBC536A**30	CNPH*3617A**	58VMR120−20	33,200	11.5	14.0	34,600	3 62	8.0	21,000	2.50
4804701	25HBC536A**30	CNPH*3617A**	59*N*A060V17**14	32,800	11.4	13.7	34,400	3 52	8.0	21,000	2.46
4804702	25HBC536A**30	CNPH*3617A**	59*N*A080V17**14	33,000	11.5	14.0	34,400	3 56	8.0	21,000	2.48
4804703	25HBC536A**30	CNPH*3617A**	59*N*A100V21**20	33,200	11.8	14.2	34,600	3 58	8.0	21,000	2.50
4804704	25HBC536A**30	CNPH*3617A**	59*N*A120V24**22	33,200	11.8	14.2	34,400	3 60	8.0	20,800	2.50
4804705	25HBC536A**30	CNPH*3617A**	59*P5A060E17**14	33,200	11.4	13.7	34,800	3 58	8.0	21,200	2.48
4804706	25HBC536A**30	CNPH*3617A**	59*P5A080E17**16	33,200	11.8	14.2	34,400	3 58	8.0	21,000	2.48
4194252	25HBC536A**30	CNPH*3617A**	OVLAAB036098	33,000	11.5	13.5	34,800	3 56	8.0	21,400	2.46
4194254	25HBC536A**30	CNPH*3617A**	OVLAAB048112	33,400	11.5	13.5	35,000	3 64	8.2	21,400	2.50
4194255	25HBC536A**30	CNPH*3617A**	OVLAAB060154	34,200	12.0	14.0	35,400	3.78	8.5	21,600	2.58
4194251	25HBC536A**30	CNPH*3617A**	OVMAAB036098	33,200	11.5	13.5	35,000	3 56	8.0	21,400	2.46
4194253	25HBC536A**30	CNPH*3617A**	OVMAAB042112	33,200	11.5	14.0	34,800	3 62	8.2	21,200	2.50
3645917	25HBC536A**30	CNPH*3617A**+TDR		33,600	11.0	13.0	35,800	3 60	8.0	22,200	2.46
3645758	25HBC536A**30	CNPH*4221A**	58CV(A,X)070−12	33,600	12.0	14.0	34,800	3 68	8.1	21,200	2.54
3645763	25HBC536A**30	CNPH*4221A**	58CV(A,X)090−16	33,600	12.0	14.5	34,600	3.72	8.2	21,000	2.56
3645772	25HBC536A**30	CNPH*4221A**	58CV(A,X)110−20	33,800	12.0	14.5	34,600	3.74	8.2	21,000	2.56
3645779	25HBC536A**30	CNPH*4221A**	58CV(A,X)135−22	33,800	12.0	14.5	34,400	3.74	8.2	21,000	2.58
3645785	25HBC536A**30	CNPH*4221A**	58CV(A,X)155−22	33,800	12.0	14.5	34,400	3.76	8.3	21,000	2.58
3756349	25HBC536A**30	CNPH*4221A**	58HDV040−−12	33,400	11.5	13.5	35,000	3 62	8.0	21,800	2.48
3756350	25HBC536A**30	CNPH*4221A**	58HDV060−−12	33,800	11.5	13.5	35,000	3 68	8.2	21,600	2.52
3756351	25HBC536A**30	CNPH*4221A**	58HDV080−−20	34,200	12.0	14.0	35,000	3 80	8.4	21,600	2.58
3756352	25HBC536A**30	CNPH*4221A**	58HDV100−−20	34,000	12.0	14.0	35,000	3.78	8.3	21,400	2.58
3645795	25HBC536A**30	CNPH*4221A**	58ME(B,C)040−12	34,000	12.0	14.5	34,800	3.78	8.3	21,200	2.58
3645803	25HBC536A**30	CNPH*4221A**	58ME(B,C)060−12	34,000	12.0	14.5	34,800	3.78	8.3	21,200	2.58
3645811	25HBC536A**30	CNPH*4221A**	58ME(B,C)080−12	34,000	12.0	14.5	34,800	3.76	8.3	21,200	2.58
3645819	25HBC536A**30	CNPH*4221A**	58ME(B,C)080−16	34,000	12.0	14.5	34,800	3.76	8.3	21,200	2.58
3645828	25HBC536A**30	CNPH*4221A**	58ME(B,C)100−20	33,800	12.0	14.5	34,600	3.76	8.3	21,000	2.58
3646421	25HBC536A**30	CNPH*4221A**	58MEB040−12	34,000	12.0	14.5	34,800	3.78	8.3	21,200	2.58
3645835	25HBC536A**30	CNPH*4221A**	58MV(B,C)060−14	33,800	12.0	14.5	34,800	3.74	8.2	21,200	2.56
3645844	25HBC536A**30	CNPH*4221A**	58MV(B,C)080−14	33,600	12.0	14.0	34,800	3.70	8.1	21,200	2.54
3645855	25HBC536A**30	CNPH*4221A**	58MV(B,C)080−20	33,600	12.0	14.0	34,600	3.70	8.1	21,200	2.54
3645864	25HBC536A**30	CNPH*4221A**	58MV(B,C)100−20	33,800	12.0	14.5	34,600	3.74	8.2	21,200	2.56
3645871	25HBC536A**30	CNPH*4221A**	58MV(B,C)120−20	33,800	12.0	14.5	34,400	3.72	8.2	21,000	2.56
3645877	25HBC536A**30	CNPH*4221A**	58MVB040−14	33,600	11.5	14.0	34,600	3 66	8.1	21,200	2.52
3645883	25HBC536A**30	CNPH*4221A**	58PH*045−08	33,600	11.2	13.5	35,200	3 64	8.0	21,600	2.50
3645888	25HBC536A**30	CNPH*4221A**	58PH*070−16	33,600	11.5	14.0	35,000	3 68	8.1	21,400	2.52
3645897	25HBC536A**30	CNPH*4221A**	58PH*090−16	34,000	12.0	14.5	34,800	3.78	8.5	21,200	2.58
3645905	25HBC536A**30	CNPH*4221A**	58PH*110−20	34,000	12.0	14.5	34,800	3 80	8.5	21,200	2.60
3810533	25HBC536A**30	CNPH*4221A**	58VLR105−12	33,800	11.5	14.0	35,000	3.72	8.4	21,400	2.56
3810535	25HBC536A**30	CNPH*4221A**	58VLR120−20	33,800	12.0	14.5	34,600	3.74	8.2	21,000	2.58
3810532	25HBC536A**30	CNPH*4221A**	58VMR105−12	33,400	12.0	14.0	34,600	3 66	8.2	21,000	2.52
3810534	25HBC536A**30	CNPH*4221A**	58VMR120−20	33,600	12.0	14.5	34,600	3.70	8.2	21,000	2.54
4804707	25HBC536A**30	CNPH*4221A**	59*N*A060V17**14	33,200	11.5	14.0	34,600	3 60	8.0	21,000	2.48
4804708	25HBC536A**30	CNPH*4221A**	59*N*A080V17**14	33,400	11.8	14.2	34,600	3 64	8.2	21,000	2.52
4804709	25HBC536A**30	CNPH*4221A**	59*N*A100V21**20	33,600	11.8	14.2	34,600	3 66	8.2	21,000	2.52
4804710	25HBC536A**30	CNPH*4221A**	59*N*A120V24**22	33,600	12.0	14.5	34,600	3 68	8.2	21,000	2.54
4804711	25HBC536A**30	CNPH*4221A**	59*P5A060E17**14	33,600	11.5	14.0	35,000	3 66	8.2	21,400	2.52
4804712	25HBC536A**30	CNPH*4221A**	59*P5A080E17**16	33,600	11.8	14.2	34,600	3 66	8.2	21,200	2.52
4194257	25HBC536A**30	CNPH*4221A**	OVLAAB036098	33,400	11.5	13.5	35,000	3 64	8.2	21,400	2.50
4194259	25HBC536A**30	CNPH*4221A**	OVLAAB048112	33,800	11.5	14.0	35,000	3.72	8.4	21,400	2.54
4194260	25HBC536A**30	CNPH*4221A**	OVLAAB060154	34,600	12.0	14.5	35,400	3 88	8.7	21,800	2.62
4194256	25HBC536A**30	CNPH*4221A**	OVMAAB036098	33,600	11.5	13.5	35,000	3 64	8.2	21,400	2.50
4194258	25HBC536A**30	CNPH*4221A**	OVMAAB042112	33,800	12.0	14.0	34,800	3.70	8.2	21,200	2.54
3645918	25HBC536A**30	CNPH*4221A**+TDR		33,800	11.2	13.0	35,800	3 66	8.2	22,200	2.50
3756353	25HBC536A**30	CNPH*4321A**	58HDV040−−12	34,600	11.5	14.0	35,800	3 80	8.3	22,000	2.56
3756354	25HBC536A**30	CNPH*4321A**	58HDV060−−12	35,000	12.0	14.0	35,800	3 90	8.5	22,000	2.62
3756355	25HBC536A**30	CNPH*4321A**	58HDV080−−20	35,400	12.2	14.5	35,800	4 02	8.8	22,000	2.68
3756356	25HBC536A**30	CNPH*4321A**	58HDV100−−20	35,200	12.5	15.0	35,600	4 00	8.7	21,600	2.68
3810537	25HBC536A**30	CNPH*4321A**	58VLR105−12	34,800	12.0	14.5	35,400	3 92	8.5	21,600	2.64
3810539	25HBC536A**30	CNPH*4321A**	58VLR120−20	34,800	12.5	15.0	35,000	3 94	8.5	21,200	2.66
3810536	25HBC536A**30	CNPH*4321A**	58VMR105−12	34,400	12.0	14.5	35,000	3 86	8.5	21,200	2.62
3810538	25HBC536A**30	CNPH*4321A**	58VMR120−20	34,600	12.5	15.0	35,000	3 90	8.5	21,200	2.64
4804713	25HBC536A**30	CNPH*4321A**	59*N*A060V17**14	34,200	12.0	14.5	35,000	3.78	8.5	21,200	2.58
4804714	25HBC536A**30	CNPH*4321A**	59*N*A080V17**14	34,400	12.0	14.5	34,800	3 82	8.5	21,200	2.60
4804715	25HBC536A**30	CNPH*4321A**	59*N*A100V21**20	34,600	12.0	14.5	35,000	3 86	8.5	21,200	2.62

See notes on page 36

COMBINATION RATINGS CONTINUED

AHRI Ref. No.	Model Number	Coil Model Number	Furnace Model Number	Cooling Capacity	EER	SEER	High Temp		HSPF	Low Temp	
							E Capacity	E COP		H Capacity	H COP
4804716	25HBC536A**30	CNPH*4321A**	59*N*A120V24**22	34,600	12.5	15.0	34,800	3 88	8.5	21,200	2.64
4804717	25HBC536A**30	CNPH*4321A**	59*P5A060E17**14	34,800	12.0	14.5	35,400	3 88	8.5	21,800	2.60
4804718	25HBC536A**30	CNPH*4321A**	59*P5A080E17**16	34,600	12.0	14.5	35,200	3 88	8.5	21,400	2.62
4194262	25HBC536A**30	CNPH*4321A**	OVLAAB036098	34,400	12.0	14.0	35,400	3 82	8.5	21,600	2.58
4194264	25HBC536A**30	CNPH*4321A**	OVLAAB048112	34,800	12.0	14.5	35,400	3 92	8.5	21,600	2.64
4194265	25HBC536A**30	CNPH*4321A**	OVLAAB060154	35,600	12.5	15.0	35,800	4.10	9.0	22,000	2.72
4194261	25HBC536A**30	CNPH*4321A**	OVMAAB036098	34,600	12.0	14.0	35,400	3 84	8.5	21,600	2.60
4194263	25HBC536A**30	CNPH*4321A**	OVMAAB042112	34,600	12.0	14.5	35,200	3 90	8.5	21,400	2.62
3645764	25HBC536A**30	CNPV*3617A**	58CV(A,X)090−16	33,400	12.0	14.0	34,400	3 64	8.0	21,000	2.52
4194219	25HBC536A**30	CNPV*3617A**	58HDV040−−12	33,000	11.0	13.0	35,000	3 54	8.0	21,600	2.44
4194220	25HBC536A**30	CNPV*3617A**	58HDV060−−12	33,400	11.0	13.5	35,000	3 60	8.0	21,600	2.48
3645796	25HBC536A**30	CNPV*3617A**	58ME(B,C)040−12	33,400	12.0	14.0	34,600	3 68	8.1	21,000	2.54
3645804	25HBC536A**30	CNPV*3617A**	58ME(B,C)060−12	33,600	12.0	14.0	34,600	3 68	8.1	21,200	2.54
3645812	25HBC536A**30	CNPV*3617A**	58ME(B,C)080−12	33,400	12.0	14.0	34,600	3 66	8.1	21,000	2.54
3645820	25HBC536A**30	CNPV*3617A**	58ME(B,C)080−16	33,400	12.0	14.0	34,600	3 68	8.1	21,200	2.54
3646422	25HBC536A**30	CNPV*3617A**	58MEB040−12	33,400	12.0	14.0	34,600	3 68	8.1	21,000	2.54
3645836	25HBC536A**30	CNPV*3617A**	58MV(B,C)060−14	33,400	12.0	14.0	34,600	3 66	8.1	21,200	2.52
3645889	25HBC536A**30	CNPV*3617A**	58PH*070−16	33,200	11.5	13.5	34,800	3 60	7.9	21,200	2.48
3645957	25HBC536A**30	CNPV*3617A**	58UVB060−14	33,400	12.0	14.0	34,600	3 66	8.1	21,200	2.52
3810519	25HBC536A**30	CNPV*3617A**	58VLR105−12	33,400	11.5	14.0	34,800	3 64	8.2	21,400	2.52
3810518	25HBC536A**30	CNPV*3617A**	58VMR105−12	33,000	11.5	14.0	34,400	3 58	8.0	21,000	2.48
4804677	25HBC536A**30	CNPV*3617A**	59*N*A060V17**14	32,800	11.4	13.7	34,400	3 52	8.0	21,000	2.46
4804678	25HBC536A**30	CNPV*3617A**	59*N*A080V17**14	33,000	11.5	14.0	34,400	3 56	8.0	21,000	2.48
4804679	25HBC536A**30	CNPV*3617A**	59*P5A060E17**14	33,200	11.4	13.7	34,800	3 58	8.0	21,200	2.48
4804680	25HBC536A**30	CNPV*3617A**	59*P5A080E17**16	33,200	11.8	14.2	34,400	3 58	8.0	21,000	2.48
4194233	25HBC536A**30	CNPV*3617A**	OVLAAB036098	33,000	11.5	13.5	34,800	3 56	8.0	21,400	2.46
4194232	25HBC536A**30	CNPV*3617A**	OVMAAB036098	33,200	11.5	13.5	35,000	3 56	8.0	21,400	2.46
4194234	25HBC536A**30	CNPV*3617A**	OVMAAB042112	33,200	11.5	14.0	34,800	3 62	8.2	21,200	2.50
3645919	25HBC536A**30	CNPV*3617A**+TDR		33,600	11.0	13.0	35,800	3 60	8.0	22,200	2.46
3645773	25HBC536A**30	CNPV*3621A**	58CV(A,X)110−20	33,400	12.0	14.0	34,400	3 66	8.0	21,000	2.52
4194221	25HBC536A**30	CNPV*3621A**	58HDV040−−12	33,000	11.0	13.0	35,000	3 54	8.0	21,600	2.44
4194222	25HBC536A**30	CNPV*3621A**	58HDV060−−12	33,400	11.5	13.5	35,000	3 62	8.2	21,600	2.48
4194223	25HBC536A**30	CNPV*3621A**	58HDV080−−20	33,800	11.5	14.0	35,200	3.72	8.4	21,600	2.54
3645829	25HBC536A**30	CNPV*3621A**	58ME(B,C)100−20	33,400	12.0	14.5	34,400	3 68	8.1	20,800	2.54
3645845	25HBC536A**30	CNPV*3621A**	58MV(B,C)080−14	33,200	11.5	14.0	34,600	3 62	8.0	21,200	2.50
3645856	25HBC536A**30	CNPV*3621A**	58MV(B,C)080−20	33,200	12.0	14.0	34,400	3 62	8.0	21,000	2.50
3645865	25HBC536A**30	CNPV*3621A**	58MV(B,C)100−20	33,400	12.0	14.0	34,600	3 66	8.1	21,200	2.52
3645898	25HBC536A**30	CNPV*3621A**	58PH*090−16	33,600	12.0	14.5	34,600	3.70	8.1	21,000	2.54
3645906	25HBC536A**30	CNPV*3621A**	58PH*110−20	33,600	12.0	14.5	34,600	3.72	8.2	21,000	2.56
3645958	25HBC536A**30	CNPV*3621A**	58UVB080−14	33,200	11.5	14.0	34,600	3 62	8.0	21,200	2.50
3645959	25HBC536A**30	CNPV*3621A**	58UVB080−20	33,200	12.0	14.0	34,400	3 62	8.0	21,000	2.50
3645960	25HBC536A**30	CNPV*3621A**	58UVB100−20	33,400	12.0	14.0	34,600	3 66	8.1	21,200	2.52
3810521	25HBC536A**30	CNPV*3621A**	58VLR120−20	33,400	12.0	14.5	34,400	3 66	8.2	20,800	2.54
3810520	25HBC536A**30	CNPV*3621A**	58VMR120−20	33,200	12.0	14.0	34,400	3 62	8.0	21,000	2.52
4804681	25HBC536A**30	CNPV*3621A**	59*N*A060V17**14	32,800	11.4	13.7	34,400	3 52	8.0	21,000	2.46
4804682	25HBC536A**30	CNPV*3621A**	59*N*A080V17**14	33,000	11.8	14.2	34,400	3 56	8.0	21,000	2.48
4804683	25HBC536A**30	CNPV*3621A**	59*N*A100V21**20	33,200	11.8	14.2	34,400	3 60	8.0	21,000	2.50
4804684	25HBC536A**30	CNPV*3621A**	59*P5A060E17**14	33,200	11.4	13.7	34,800	3 60	8.0	21,200	2.48
4804685	25HBC536A**30	CNPV*3621A**	59*P5A080E17**16	33,200	11.8	14.2	34,400	3 60	8.0	21,000	2.50
4194236	25HBC536A**30	CNPV*3621A**	OVLAAB036098	33,000	11.5	13.5	34,800	3 56	8.0	21,400	2.46
4194238	25HBC536A**30	CNPV*3621A**	OVLAAB048112	33,400	11.5	13.5	35,000	3 64	8.2	21,400	2.50
4194235	25HBC536A**30	CNPV*3621A**	OVMAAB036098	33,200	11.5	13.5	35,000	3 58	8.0	21,400	2.48
4194237	25HBC536A**30	CNPV*3621A**	OVMAAB042112	33,400	11.5	14.0	34,800	3 62	8.2	21,200	2.50
3645920	25HBC536A**30	CNPV*3621A**+TDR		33,600	11.0	13.0	35,800	3 60	8.0	22,200	2.46
3645765	25HBC536A**30	CNPV*3717A**	58CV(A,X)090−16	34,600	12.5	15.0	35,000	3 90	8.5	21,200	2.64
4194224	25HBC536A**30	CNPV*3717A**	58HDV040−−12	34,400	11.5	13.5	35,800	3.78	8.5	22,000	2.56
4194225	25HBC536A**30	CNPV*3717A**	58HDV060−−12	34,800	12.0	14.0	35,800	3 88	8.5	22,000	2.60
3645797	25HBC536A**30	CNPV*3717A**	58ME(B,C)040−12	35,000	12.5	15.0	35,200	3 96	8.7	21,400	2.66
3645805	25HBC536A**30	CNPV*3717A**	58ME(B,C)060−12	35,000	12.0	14.5	35,400	3 96	8.8	21,600	2.66
3645813	25HBC536A**30	CNPV*3717A**	58ME(B,C)080−12	34,800	12.0	14.5	35,200	3 94	8.7	21,400	2.66
3645821	25HBC536A**30	CNPV*3717A**	58ME(B,C)080−16	35,000	12.0	14.5	35,400	3 96	8.7	21,600	2.66
3646423	25HBC536A**30	CNPV*3717A**	58MEB040−12	35,000	12.5	15.0	35,200	3 96	8.7	21,400	2.66
3645837	25HBC536A**30	CNPV*3717A**	58MV(B,C)060−14	34,800	12.5	15.0	35,200	3 94	8.7	21,400	2.64
3645890	25HBC536A**30	CNPV*3717A**	58PH*070−16	34,600	12.0	14.5	35,400	3 88	8.5	21,600	2.60
3645961	25HBC536A**30	CNPV*3717A**	58UVB060−14	34,800	12.5	15.0	35,200	3 94	8.7	21,400	2.64
3810523	25HBC536A**30	CNPV*3717A**	58VLR105−12	34,800	12.0	14.5	35,400	3 90	8.5	21,600	2.62
3810522	25HBC536A**30	CNPV*3717A**	58VMR105−12	34,400	12.0	14.5	35,000	3 84	8.5	21,200	2.60
4804686	25HBC536A**30	CNPV*3717A**	59*N*A060V17**14	34,200	12.0	14.5	35,000	3.78	8.2	21,400	2.56
4804687	25HBC536A**30	CNPV*3717A**	59*N*A080V17**14	34,200	12.0	14.5	35,000	3 82	8.5	21,200	2.60
4804688	25HBC536A**30	CNPV*3717A**	59*P5A060E17**14	34,600	12.0	14.5	35,400	3 86	8.5	21,600	2.60
4804689	25HBC536A**30	CNPV*3717A**	59*P5A080E17**16	34,600	12.0	14.5	35,200	3 86	8.5	21,400	2.60
4194240	25HBC536A**30	CNPV*3717A**	OVLAAB036098	34,400	12.0	14.0	35,400	3 82	8.5	21,600	2.58
4194239	25HBC536A**30	CNPV*3717A**	OVMAAB036098	34,600	12.0	14.0	35,400	3 82	8.5	21,800	2.58
4194241	25HBC536A**30	CNPV*3717A**	OVMAAB042112	34,600	12.0	14.5	35,200	3 88	8.5	21,400	2.62
3645921	25HBC536A**30	CNPV*3717A**+TDR		35,000	11.5	13.5	36,000	3 84	8.5	22,600	2.56
3645766	25HBC536A**30	CNPV*4217A**	58CV(A,X)090−16	34,000	12.0	14.5	34,800	3.78	8.5	21,000	2.58
4194226	25HBC536A**30	CNPV*4217A**	58HDV040−−12	33,800	11.5	13.5	35,400	3 66	8.2	21,800	2.50
4194227	25HBC536A**30	CNPV*4217A**	58HDV060−−12	34,000	11.5	14.0	35,400	3.74	8.2	21,800	2.54
3645798	25HBC536A**30	CNPV*4217A**	58ME(B,C)040−12	34,200	12.0	14.5	35,000	3 82	8.5	21,200	2.60
3645806	25HBC536A**30	CNPV*4217A**	58ME(B,C)060−12	34,200	12.0	14.5	35,000	3 82	8.5	21,400	2.60

See notes on page 36

COMBINATION RATINGS CONTINUED

AHRI Ref. No.	Model Number	Coil Model Number	Furnace Model Number	Cooling Capacity	EER	SEER	High Temp		HSPF	Low Temp	
							E Capacity	E COP		H Capacity	H COP
3645814	25HBC536A**30	CNPV*4217A**	58ME(B,C)080−12	34,200	12.0	14.5	35,000	3 80	8.5	21,200	2.60
3645822	25HBC536A**30	CNPV*4217A**	58ME(B,C)080−16	34,200	12.0	14.5	35,000	3 82	8.5	21,400	2.60
3646424	25HBC536A**30	CNPV*4217A**	58MEB040−12	34,200	12.0	14.5	35,000	3 82	8.5	21,200	2.60
3645838	25HBC536A**30	CNPV*4217A**	58MV(B,C)060−14	34,200	12.0	14.5	35,000	3 80	8.5	21,400	2.58
3645891	25HBC536A**30	CNPV*4217A**	58PH*070−16	34,000	12.0	14.0	35,200	3.74	8.2	21,400	2.56
3645962	25HBC536A**30	CNPV*4217A**	58UVB060−14	34,200	12.0	14.5	35,000	3 80	8.5	21,400	2.58
3810525	25HBC536A**30	CNPV*4217A**	58VLR105−12	34,200	12.0	14.0	35,200	3.78	8.4	21,400	2.58
3810524	25HBC536A**30	CNPV*4217A**	58VMR105−12	33,800	12.0	14.5	34,800	3.70	8.2	21,200	2.54
4804690	25HBC536A**30	CNPV*4217A**	59*N*A060V17**14	33,400	11.8	14.2	34,800	3 64	8.2	21,200	2.50
4804691	25HBC536A**30	CNPV*4217A**	59*N*A080V17**14	33,600	12.0	14.5	34,600	3 68	8.2	21,000	2.54
4804692	25HBC536A**30	CNPV*4217A**	59*P5A060E17**14	34,000	11.8	14.2	35,200	3.72	8.2	21,400	2.54
4804693	25HBC536A**30	CNPV*4217A**	59*P5A080E17**16	33,800	12.0	14.5	34,800	3.72	8.2	21,200	2.54
4194243	25HBC536A**30	CNPV*4217A**	OVLAAB036098	33,800	11.5	14.0	35,000	3 68	8.2	21,400	2.52
4194242	25HBC536A**30	CNPV*4217A**	OVMAAB036098	33,800	11.5	14.0	35,200	3.70	8.2	21,600	2.52
4194244	25HBC536A**30	CNPV*4217A**	OVMAAB042112	34,000	12.0	14.0	35,000	3.76	8.2	21,400	2.56
3645922	25HBC536A**30	CNPV*4217A**+TDR		34,000	11.2	13.5	36,000	3.72	8.2	22,400	2.52
3645774	25HBC536A**30	CNPV*4221A**	58CV(A,X)110−20	33,800	12.0	14.5	34,600	3.74	8.2	21,000	2.56
4194228	25HBC536A**30	CNPV*4221A**	58HDV040−−12	33,400	11.0	13.5	35,200	3 62	8.2	21,800	2.48
4194229	25HBC536A**30	CNPV*4221A**	58HDV060−−12	33,800	11.5	13.5	35,200	3 68	8.2	21,600	2.52
4194230	25HBC536A**30	CNPV*4221A**	58HDV080−−20	34,200	12.0	14.0	35,400	3 80	8.5	21,600	2.58
3645830	25HBC536A**30	CNPV*4221A**	58ME(B,C)100−20	33,800	12.0	14.5	34,600	3.76	8.2	21,000	2.58
3645846	25HBC536A**30	CNPV*4221A**	58MV(B,C)080−14	33,600	12.0	14.0	34,800	3.70	8.1	21,200	2.54
3645857	25HBC536A**30	CNPV*4221A**	58MV(B,C)080−20	33,600	12.0	14.0	34,600	3.70	8.1	21,200	2.54
3645866	25HBC536A**30	CNPV*4221A**	58MV(B,C)100−20	33,800	12.0	14.5	34,600	3.74	8.2	21,200	2.56
3645899	25HBC536A**30	CNPV*4221A**	58PH*090−16	34,000	12.0	14.5	34,800	3.78	8.5	21,200	2.58
3645907	25HBC536A**30	CNPV*4221A**	58PH*110−20	34,000	12.0	14.5	34,800	3 80	8.5	21,200	2.60
3645963	25HBC536A**30	CNPV*4221A**	58UVB080−14	33,600	12.0	14.0	34,800	3.70	8.1	21,200	2.54
3645964	25HBC536A**30	CNPV*4221A**	58UVB080−20	33,600	12.0	14.0	34,600	3.70	8.1	21,200	2.54
3645965	25HBC536A**30	CNPV*4221A**	58UVB100−20	33,800	12.0	14.5	34,600	3.74	8.2	21,200	2.56
3810527	25HBC536A**30	CNPV*4221A**	58VLR120−20	33,800	12.0	14.5	34,600	3.74	8.4	21,000	2.58
3810526	25HBC536A**30	CNPV*4221A**	58VMR120−20	33,600	12.0	14.5	34,600	3.70	8.2	21,000	2.54
4804694	25HBC536A**30	CNPV*4221A**	59*N*A060V17**14	33,200	11.5	14.0	34,600	3 60	8.0	21,000	2.48
4804695	25HBC536A**30	CNPV*4221A**	59*N*A080V17**14	33,400	11.8	14.2	34,600	3 64	8.2	21,000	2.52
4804696	25HBC536A**30	CNPV*4221A**	59*N*A100V21**20	33,600	11.8	14.2	34,600	3 66	8.2	21,000	2.52
4804697	25HBC536A**30	CNPV*4221A**	59*P5A060E17**14	33,600	11.5	14.0	35,000	3 66	8.2	21,400	2.52
4804698	25HBC536A**30	CNPV*4221A**	59*P5A080E17**16	33,600	11.8	14.2	34,600	3 66	8.2	21,200	2.52
4194246	25HBC536A**30	CNPV*4221A**	OVLAAB036098	33,400	11.5	13.5	35,000	3 64	8.2	21,400	2.50
4194248	25HBC536A**30	CNPV*4221A**	OVLAAB048112	33,800	11.5	14.0	35,000	3.72	8.4	21,400	2.54
4194245	25HBC536A**30	CNPV*4221A**	OVMAAB036098	33,600	11.5	13.5	35,000	3 64	8.2	21,400	2.50
4194247	25HBC536A**30	CNPV*4221A**	OVMAAB042112	33,800	12.0	14.0	34,800	3.70	8.2	21,200	2.54
3645923	25HBC536A**30	CNPV*4221A**+TDR		33,800	11.2	13.0	35,800	3 66	8.2	22,200	2.50
3645780	25HBC536A**30	CNPV*4324A**	58CV(A,X)135−22	34,800	12.5	15.0	34,800	3 96	8.6	21,200	2.68
3645786	25HBC536A**30	CNPV*4324A**	58CV(A,X)155−22	34,800	12.5	15.5	34,800	4 00	8.7	21,000	2.70
4194231	25HBC536A**30	CNPV*4324A**	58HDV080−−20	35,600	12.5	14.5	36,000	4 04	9.0	22,000	2.68
4149578	25HBC536A**30	CNPV*4324A**	58HDV100−−20	35,400	12.5	15.0	35,600	4 04	8.8	21,600	2.70
3645792	25HBC536A**30	CNPV*4324A**	58HDV100−−20 (DWNFLW ONLY)	35,400	12.5	15.0	35,600	4 04	8.8	21,600	2.70
3645847	25HBC536A**30	CNPV*4324A**	58MV(B,C)080−14	34,800	12.2	14.5	35,200	3 92	8.5	21,400	2.64
3645858	25HBC536A**30	CNPV*4324A**	58MV(B,C)080−20	34,600	12.5	15.0	35,000	3 92	8.5	21,200	2.64
3645872	25HBC536A**30	CNPV*4324A**	58MV(B,C)120−20	34,800	12.5	15.0	35,000	3 94	8.6	21,200	2.66
3645878	25HBC536A**30	CNPV*4324A**	58MVB040−14	34,600	12.2	14.5	35,000	3 88	8.5	21,400	2.62
3645966	25HBC536A**30	CNPV*4324A**	58UVB080−14	34,800	12.2	14.5	35,200	3 92	8.5	21,400	2.64
3645967	25HBC536A**30	CNPV*4324A**	58UVB080−20	34,600	12.5	15.0	35,000	3 92	8.5	21,200	2.64
3645968	25HBC536A**30	CNPV*4324A**	58UVB120−20	34,800	12.5	15.0	35,000	3 94	8.6	21,200	2.66
4804699	25HBC536A**30	CNPV*4324A**	59*N*A100V21**20	34,600	12.5	15.0	35,000	3 88	8.5	21,200	2.62
4804700	25HBC536A**30	CNPV*4324A**	59*N*A120V24**22	34,600	12.5	15.2	34,800	3 90	8.5	21,000	2.64
4194249	25HBC536A**30	CNPV*4324A**	OVLAAB048112	35,000	12.5	14.5	35,400	3 94	8.5	21,600	2.64
4194250	25HBC536A**30	CNPV*4324A**	OVLAAB060154	35,800	12.5	15.0	35,800	4.12	9.0	21,800	2.72
3645924	25HBC536A**30	CNPV*4324A**		35,000	11.5	13.5	36,000	3 84	8.4	22,600	2.56
3645848	25HBC536A**30	CNPV*4821A**	58MV(B,C)080−14	34,200	12.0	14.5	35,000	3 82	8.4	21,400	2.60
3645969	25HBC536A**30	CNPV*4821A**	58UVB080−14	34,200	12.0	14.5	35,000	3 82	8.4	21,400	2.60
3645849	25HBC536A**30	CNPV*6024A**	58MV(B,C)080−14	34,600	12.0	14.5	35,000	3 88	8.5	21,400	2.62
3645970	25HBC536A**30	CNPV*6024A**	58UVB080−14	34,600	12.0	14.5	35,000	3 88	8.5	21,400	2.62
3645759	25HBC536A**30	CSPH*3612A**	58CV(A,X)070−12	33,400	12.0	14.0	34,800	3.74	8.0	21,200	2.56
3645767	25HBC536A**30	CSPH*3612A**	58CV(A,X)090−16	33,600	12.0	14.5	34,800	3 80	8.1	21,200	2.60
3645775	25HBC536A**30	CSPH*3612A**	58CV(A,X)110−20	33,600	12.0	14.5	34,800	3 80	8.1	21,200	2.60
3645781	25HBC536A**30	CSPH*3612A**	58CV(A,X)135−22	33,600	12.0	14.5	34,800	3 80	8.1	21,000	2.60
3645787	25HBC536A**30	CSPH*3612A**	58CV(A,X)155−22	33,600	12.0	14.5	34,600	3 84	8.2	21,000	2.62
3756357	25HBC536A**30	CSPH*3612A**	58HDV040−−12	33,200	11.2	13.5	34,800	3 68	8.0	21,800	2.50
3756358	25HBC536A**30	CSPH*3612A**	58HDV060−−12	33,400	11.5	13.5	34,800	3.76	8.0	21,800	2.56
3756359	25HBC536A**30	CSPH*3612A**	58HDV080−−20	33,800	11.5	14.0	34,800	3 88	8.2	21,800	2.62
3756360	25HBC536A**30	CSPH*3612A**	58HDV100−−20	33,600	12.0	14.0	34,800	3 84	8.2	21,400	2.60
3645799	25HBC536A**30	CSPH*3612A**	58ME(B,C)040−12	33,600	12.0	14.5	35,000	3 84	8.2	21,200	2.62
3645807	25HBC536A**30	CSPH*3612A**	58ME(B,C)060−12	33,800	12.0	14.0	35,000	3 84	8.2	21,400	2.60
3645815	25HBC536A**30	CSPH*3612A**	58ME(B,C)080−12	33,600	12.0	14.5	35,000	3 84	8.2	21,200	2.60
3645823	25HBC536A**30	CSPH*3612A**	58ME(B,C)080−16	33,600	12.0	14.0	34,800	3 84	8.2	21,400	2.60
3645831	25HBC536A**30	CSPH*3612A**	58ME(B,C)100−20	33,600	12.0	14.5	34,800	3 84	8.2	21,000	2.62
3646425	25HBC536A**30	CSPH*3612A**	58MEB040−12	33,600	12.0	14.5	35,000	3 84	8.2	21,200	2.62
3645839	25HBC536A**30	CSPH*3612A**	58MV(B,C)060−14	33,600	12.0	14.0	35,000	3 82	8.2	21,400	2.60
3645850	25HBC536A**30	CSPH*3612A**	58MV(B,C)080−14	33,400	12.0	14.0	35,000	3.76	8.1	21,400	2.58

See notes on page 36

COMBINATION RATINGS CONTINUED

AHRI Ref. No.	Model Number	Coil Model Number	Furnace Model Number	Cooling Capacity	EER	SEER	High Temp		HSPF	Low Temp	
							E Capacity	E COP		H Capacity	H COP
3645859	25HBC536A**30	CSPH*3612A**	58MV(B,C)080−20	33,400	12.0	14.0	34,800	3.76	8.1	21,200	2.58
3645867	25HBC536A**30	CSPH*3612A**	58MV(B,C)100−20	33,600	12.0	14.0	35,000	3 80	8.1	21,200	2.60
3645873	25HBC536A**30	CSPH*3612A**	58MV(B,C)120−20	33,600	12.0	14.5	34,800	3 80	8.1	21,200	2.60
3645879	25HBC536A**30	CSPH*3612A**	58MVB040−14	33,400	11.5	14.0	35,000	3.74	8.0	21,200	2.56
3645884	25HBC536A**30	CSPH*3612A**	58PH*045−08	33,400	11.5	13.5	35,400	3.72	8.0	21,800	2.52
3645892	25HBC536A**30	CSPH*3612A**	58PH*070−16	33,400	12.0	14.0	35,200	3.76	8.0	21,400	2.56
3645900	25HBC536A**30	CSPH*3612A**	58PH*090−16	33,600	12.0	14.5	35,000	3 86	8.2	21,200	2.62
3645908	25HBC536A**30	CSPH*3612A**	58PH*110−20	33,800	12.0	14.5	35,000	3 88	8.3	21,200	2.64
3810541	25HBC536A**30	CSPH*3612A**	58VLR105−12	34,200	12.0	14.5	35,200	3 80	8.5	21,400	2.58
3810543	25HBC536A**30	CSPH*3612A**	58VLR120−20	34,200	12.5	15.0	34,800	3 82	8.5	21,000	2.60
3810540	25HBC536A**30	CSPH*3612A**	58VMR105−12	33,800	12.0	14.5	34,800	3.72	8.2	21,200	2.56
3810542	25HBC536A**30	CSPH*3612A**	58VMR120−20	34,000	12.0	14.5	34,800	3.76	8.4	21,200	2.58
4804719	25HBC536A**30	CSPH*3612A**	59*N*A060V17**14	33,600	11.8	14.2	34,800	3 66	8.2	21,200	2.52
4804720	25HBC536A**30	CSPH*3612A**	59*N*A080V17**14	33,800	12.0	14.5	34,600	3.70	8.2	21,000	2.54
4804721	25HBC536A**30	CSPH*3612A**	59*N*A100V21**20	34,000	12.0	14.5	34,800	3.74	8.2	21,200	2.56
4804722	25HBC536A**30	CSPH*3612A**	59*N*A120V24**22	34,000	12.0	14.5	34,600	3.76	8.2	21,000	2.58
4804723	25HBC536A**30	CSPH*3612A**	59*P5A060E17**14	34,200	11.8	14.2	35,200	3.74	8.2	21,600	2.54
4804724	25HBC536A**30	CSPH*3612A**	59*P5A080E17**16	34,000	12.0	14.5	34,800	3.74	8.2	21,200	2.56
4194267	25HBC536A**30	CSPH*3612A**	OVLAAB036098	33,800	11.5	14.0	35,200	3.70	8.2	21,400	2.52
4194269	25HBC536A**30	CSPH*3612A**	OVLAAB048112	34,200	12.0	14.0	35,200	3.78	8.5	21,600	2.58
4194270	25HBC536A**30	CSPH*3612A**	OVLAAB060154	35,000	12.0	14.5	35,600	3 96	8.8	21,800	2.66
4194266	25HBC536A**30	CSPH*3612A**	OVMAAB036098	34,000	11.5	14.0	35,200	3.72	8.4	21,600	2.54
4194268	25HBC536A**30	CSPH*3612A**	OVMAAB042112	34,200	12.0	14.5	35,000	3.76	8.4	21,400	2.58
3645925	25HBC536A**30	CSPH*3612A**+TDR		33,600	11.0	13.0	35,800	3.72	8.1	22,400	2.52
3645760	25HBC536A**30	CSPH*4212A**	58CV(A,X)070−12	33,800	12.0	14.0	35,000	3.78	8.2	21,400	2.58
3645768	25HBC536A**30	CSPH*4212A**	58CV(A,X)090−16	33,800	12.0	14.5	34,800	3 84	8.3	21,200	2.62
3645776	25HBC536A**30	CSPH*4212A**	58CV(A,X)110−20	34,000	12.0	14.5	34,800	3 84	8.3	21,200	2.62
3645782	25HBC536A**30	CSPH*4212A**	58CV(A,X)135−22	34,000	12.0	14.5	34,800	3 84	8.3	21,200	2.62
3645788	25HBC536A**30	CSPH*4212A**	58CV(A,X)155−22	34,000	12.5	15.0	34,800	3 88	8.4	21,000	2.64
3756361	25HBC536A**30	CSPH*4212A**	58HDV040−−12	33,400	11.5	13.5	35,000	3.72	8.0	21,800	2.52
3756362	25HBC536A**30	CSPH*4212A**	58HDV060−−12	33,800	11.5	13.5	35,000	3 82	8.2	21,800	2.58
3756363	25HBC536A**30	CSPH*4212A**	58HDV080−−20	34,200	12.0	14.0	35,000	3 92	8.4	21,800	2.64
3756364	25HBC536A**30	CSPH*4212A**	58HDV100−−20	34,000	12.0	14.0	35,000	3 90	8.3	21,600	2.64
3645800	25HBC536A**30	CSPH*4212A**	58ME(B,C)040−12	34,200	12.0	14.5	35,000	3 90	8.4	21,400	2.64
3645808	25HBC536A**30	CSPH*4212A**	58ME(B,C)060−12	34,200	12.0	14.5	35,200	3 90	8.4	21,400	2.64
3645816	25HBC536A**30	CSPH*4212A**	58ME(B,C)080−12	34,200	12.0	14.5	35,000	3 88	8.4	21,400	2.62
3645824	25HBC536A**30	CSPH*4212A**	58ME(B,C)080−16	34,200	12.0	14.5	35,200	3 90	8.4	21,400	2.64
3645832	25HBC536A**30	CSPH*4212A**	58ME(B,C)100−20	34,000	12.5	15.0	34,800	3 88	8.4	21,200	2.64
3646426	25HBC536A**30	CSPH*4212A**	58MEB040−12	34,200	12.0	14.5	35,000	3 90	8.4	21,400	2.64
3645840	25HBC536A**30	CSPH*4212A**	58MV(B,C)060−14	34,000	12.0	14.5	35,000	3 86	8.3	21,400	2.62
3645851	25HBC536A**30	CSPH*4212A**	58MV(B,C)080−14	33,800	12.0	14.0	35,000	3 80	8.2	21,400	2.58
3645860	25HBC536A**30	CSPH*4212A**	58MV(B,C)080−20	33,800	12.0	14.5	35,000	3 80	8.2	21,200	2.60
3645868	25HBC536A**30	CSPH*4212A**	58MV(B,C)100−20	34,000	12.0	14.5	35,000	3 84	8.3	21,400	2.62
3645874	25HBC536A**30	CSPH*4212A**	58MV(B,C)120−20	34,000	12.0	14.5	34,800	3 84	8.3	21,200	2.62
3645880	25HBC536A**30	CSPH*4212A**	58MVB040−14	33,800	12.0	14.0	35,000	3.76	8.2	21,400	2.58
3645885	25HBC536A**30	CSPH*4212A**	58PH*045−08	33,800	11.2	13.5	35,600	3.76	8.1	21,800	2.54
3645893	25HBC536A**30	CSPH*4212A**	58PH*070−16	33,800	12.0	14.0	35,200	3 80	8.2	21,600	2.58
3645901	25HBC536A**30	CSPH*4212A**	58PH*090−16	34,200	12.0	14.5	35,000	3 90	8.5	21,400	2.64
3645909	25HBC536A**30	CSPH*4212A**	58PH*110−20	34,200	12.0	14.5	35,000	3 94	8.5	21,400	2.66
3810545	25HBC536A**30	CSPH*4212A**	58VLR105−12	34,400	12.0	14.5	35,200	3 84	8.5	21,400	2.60
3810547	25HBC536A**30	CSPH*4212A**	58VLR120−20	34,400	12.5	15.0	34,800	3 84	8.5	21,000	2.62
3810544	25HBC536A**30	CSPH*4212A**	58VMR105−12	34,000	12.0	14.5	34,800	3.76	8.4	21,200	2.58
3810546	25HBC536A**30	CSPH*4212A**	58VMR120−20	34,200	12.0	14.5	34,800	3 80	8.5	21,200	2.60
4804725	25HBC536A**30	CSPH*4212A**	59*N*A060V17**14	33,800	11.8	14.2	34,800	3.70	8.2	21,200	2.54
4804726	25HBC536A**30	CSPH*4212A**	59*N*A080V17**14	34,000	12.0	14.5	34,800	3.74	8.2	21,200	2.56
4804727	25HBC536A**30	CSPH*4212A**	59*N*A100V21**20	34,200	12.0	14.5	34,800	3.78	8.2	21,200	2.58
4804728	25HBC536A**30	CSPH*4212A**	59*N*A120V24**22	34,200	12.0	14.5	34,800	3 80	8.5	21,000	2.60
4804729	25HBC536A**30	CSPH*4212A**	59*P5A060E17**14	34,400	11.8	14.2	35,200	3.78	8.5	21,600	2.56
4804730	25HBC536A**30	CSPH*4212A**	59*P5A080E17**16	34,200	12.0	14.5	35,000	3.78	8.5	21,200	2.58
4194272	25HBC536A**30	CSPH*4212A**	OVLAAB036098	34,200	12.0	14.0	35,200	3.74	8.2	21,600	2.54
4194274	25HBC536A**30	CSPH*4212A**	OVLAAB048112	34,600	12.0	14.5	35,400	3 84	8.5	21,600	2.60
4194275	25HBC536A**30	CSPH*4212A**	OVLAAB060154	35,400	12.5	14.5	35,600	4 00	8.5	21,800	2.68
4194271	25HBC536A**30	CSPH*4212A**	OVMAAB036098	34,200	12.0	14.0	35,200	3.76	8.2	21,600	2.56
4194273	25HBC536A**30	CSPH*4212A**	OVMAAB042112	34,400	12.0	14.5	35,000	3 82	8.5	21,400	2.60
3645926	25HBC536A**30	CSPH*4212A**+TDR		33,800	11.2	13.0	35,800	3.76	8.2	22,400	2.54
3810508	25HBC536A**30	FB4CNF036		33,600	11.2	13.5	35,200	3 68	8.2	21,600	2.50
3645927	25HBC536A**30	FB4CNF036+TXV		33,600	11.5	13.5	35,200	3.70	8.1	21,600	2.50
3810509	25HBC536A**30	FB4CNF042		35,000	12.0	13.5	35,400	3 90	8.5	21,600	2.64
3645928	25HBC536A**30	FB4CNF042+TXV		34,800	12.0	14.5	35,400	3 90	8.5	21,600	2.64
3645929	25HBC536A**30	FE4AN(B,F)003+UI		33,800	12.5	15.0	34,400	3.74	8.5	20,800	2.56
3645930	25HBC536A**30	FE4AN(B,F)005+UI		35,000	12.5	15.0	34,800	3 98	8.8	21,200	2.68
3645931	25HBC536A**30	FE4ANB006+UI		35,400	13.0	15.5	34,600	4 08	9.0	21,200	2.72
3645932	25HBC536A**30	FE4ANF002+UI		33,600	12.0	14.0	34,800	3.72	8.2	21,200	2.52
3645933	25HBC536A**30	FF1ENP036		33,600	11.0	13.0	35,800	3 56	8.0	22,200	2.44
3645934	25HBC536A**30	FF1ENP037		33,600	11.2	13.5	35,600	3 62	8.0	22,000	2.48
3645939	25HBC536A**30	FV4CN(B F)003		33,800	12.5	15.0	34,400	3.74	8.5	20,800	2.56
3645940	25HBC536A**30	FV4CN(B F)005		35,000	12.5	15.0	34,800	3 98	8.8	21,200	2.68
3645941	25HBC536A**30	FV4CNB006		35,400	13.0	15.5	34,600	4 08	9.0	21,200	2.72
3645942	25HBC536A**30	FV4CNF002		33,600	12.0	14.0	34,800	3.72	8.2	21,200	2.52
3645946	25HBC536A**30	FX4DN(B,F)043		34,800	12.5	15.0	34,200	3 92	8.7	21,600	2.64

See notes on page 36

COMBINATION RATINGS CONTINUED

AHRI Ref. No.	Model Number	Coil Model Number	Furnace Model Number	Cooling Capacity	EER	SEER	High Temp		HSPF	Low Temp	
							E Capacity	E COP		H Capacity	H COP
3810510	25HBC536A**30	FY5BNF036		34,000	11.2	13.0	35,400	3 68	8.2	21,800	2.52
3692773	25HBC536A**30	FY5BNF036+TXV		33,800	11.5	13.5	35,400	3 68	8.2	21,800	2.52
3810511	25HBC536A**30	FY5BNF042		34,600	11.5	13.0	35,600	3.78	8.4	22,000	2.56
3692774	25HBC536A**30	FY5BNF042+TXV		34,400	11.5	14.0	35,600	3.78	8.5	22,000	2.56
3646155	25HBC542A**30	†FX4DN(B,F)043		41,500	12.5	15.0	41,500	3 82	8.7	26,400	2.62
3645981	25HBC542A**30	CAP**4221A**	58CV(A,X)110−20	41,000	12.0	14.5	42,000	3 68	8.2	25,600	2.56
4194276	25HBC542A**30	CAP**4221A**	58HDV080−−20	41,500	12.0	14.0	42,000	3.70	8.2	26,200	2.56
3646032	25HBC542A**30	CAP**4221A**	58ME(B,C)100−20	41,000	12.5	14.5	42,000	3.72	8.3	25,800	2.58
3646054	25HBC542A**30	CAP**4221A**	58MV(B,C)080−14	40,500	12.0	14.0	42,000	3 62	8.1	26,000	2.52
3646062	25HBC542A**30	CAP**4221A**	58MV(B,C)080−20	40,500	12.0	14.0	42,000	3 64	8.1	25,800	2.54
3646070	25HBC542A**30	CAP**4221A**	58MV(B,C)100−20	40,500	12.0	14.0	42,000	3 62	8.1	25,600	2.52
3646101	25HBC542A**30	CAP**4221A**	58PH*090−16	41,000	12.0	14.5	42,000	3.70	8.2	25,800	2.58
3646109	25HBC542A**30	CAP**4221A**	58PH*110−20	41,000	12.5	14.5	42,000	3.72	8.3	25,600	2.58
3646159	25HBC542A**30	CAP**4221A**	58UVB080−14	40,500	12.0	14.0	42,000	3 62	8.1	26,000	2.52
3646160	25HBC542A**30	CAP**4221A**	58UVB080−20	40,500	12.0	14.0	42,000	3 64	8.1	25,800	2.54
3646161	25HBC542A**30	CAP**4221A**	58UVB100−20	40,500	12.0	14.0	42,000	3 62	8.1	25,600	2.52
3810553	25HBC542A**30	CAP**4221A**	58VLR120−20	40,500	12.0	14.5	42,000	3 66	8.2	25,600	2.56
3810552	25HBC542A**30	CAP**4221A**	58VMR120−20	40,500	12.0	14.5	42,000	3 64	8.2	25,600	2.54
4804731	25HBC542A**30	CAP**4221A**	59*N*A060V17**14	40,000	11.4	13.7	42,000	3 54	8.0	25,800	2.48
4804732	25HBC542A**30	CAP**4221A**	59*N*A080V17**14	40,500	11.8	14.2	42,000	3 58	8.0	25,800	2.50
4804733	25HBC542A**30	CAP**4221A**	59*N*A100V21**20	40,500	11.8	14.2	42,000	3 60	8.2	25,600	2.52
4804734	25HBC542A**30	CAP**4221A**	59*P5A060E17**14	40,500	11.5	14.0	42,000	3 60	8.2	26,200	2.50
4804735	25HBC542A**30	CAP**4221A**	59*P5A080E17**16	41,000	11.8	14.2	42,000	3 64	8.2	26,200	2.52
4804736	25HBC542A**30	CAP**4221A**	59*P5A100E21**16	40,500	11.8	14.2	42,000	3 62	8.2	25,800	2.52
3646126	25HBC542A**30	CAP**4221A**+TDR		41,000	11.5	13.5	42,000	3 62	8.0	27,000	2.50
3645990	25HBC542A**30	CAP**4224A**	58CV(A,X)135−22	41,000	12.5	14.5	41,500	3.70	8.3	25,600	2.58
3645998	25HBC542A**30	CAP**4224A**	58CV(A,X)155−22	41,000	12.5	14.5	41,500	3.70	8.3	25,400	2.58
4194277	25HBC542A**30	CAP**4224A**	58HDV080−−20	41,500	12.0	14.0	42,000	3.72	8.2	26,200	2.58
3646007	25HBC542A**30	CAP**4224A**	58HDV100−−20	41,000	12.0	14.5	42,000	3.70	8.2	26,000	2.56
3646040	25HBC542A**30	CAP**4224A**	58ME(B,C)120−20	41,500	12.5	15.0	42,000	3.76	8.4	25,800	2.62
3646079	25HBC542A**30	CAP**4224A**	58MV(B,C)120−20	41,000	12.0	14.5	42,000	3 66	8.2	25,600	2.56
3646087	25HBC542A**30	CAP**4224A**	58MVB040−14	40,500	12.0	14.0	42,000	3 60	8.1	25,800	2.52
3646118	25HBC542A**30	CAP**4224A**	58PH*135−20	41,000	12.0	14.5	42,000	3.72	8.3	25,800	2.58
3646162	25HBC542A**30	CAP**4224A**	58UVB120−20	41,000	12.0	14.5	42,000	3 66	8.2	25,600	2.56
4804737	25HBC542A**30	CAP**4224A**	59*N*A100V21**20	40,500	11.8	14.2	42,000	3 62	8.2	25,600	2.52
4804738	25HBC542A**30	CAP**4224A**	59*N*A120V24**22	40,500	12.0	14.5	41,500	3 64	8.2	25,400	2.54
4804739	25HBC542A**30	CAP**4224A**	59*P5A100E21**16	40,500	11.8	14.2	42,000	3 64	8.2	25,800	2.52
4804740	25HBC542A**30	CAP**4224A**	59*P5A120E24**22	41,500	12.0	14.5	42,000	3.72	8.2	26,000	2.58
3646127	25HBC542A**30	CAP**4224A**+TDR		41,000	11.5	13.5	42,000	3 62	8.0	27,000	2.50
3645975	25HBC542A**30	CAP**4817A**	58CV(A,X)090−16	41,500	12.5	14.5	42,000	3 82	8.3	26,000	2.62
3646008	25HBC542A**30	CAP**4817A**	58ME(B,C)040−12	42,000	12.5	14.5	42,000	3 86	8.4	26,400	2.62
3646014	25HBC542A**30	CAP**4817A**	58ME(B,C)060−12	42,000	12.5	14.5	42,000	3 84	8.4	26,400	2.62
3646020	25HBC542A**30	CAP**4817A**	58ME(B,C)080−12	42,000	12.5	14.5	42,000	3 86	8.4	26,200	2.64
3646026	25HBC542A**30	CAP**4817A**	58ME(B,C)080−16	42,000	12.5	14.5	42,000	3 82	8.4	26,200	2.62
3646427	25HBC542A**30	CAP**4817A**	58MEB040−12	42,000	12.5	14.5	42,000	3 86	8.4	26,400	2.62
3646048	25HBC542A**30	CAP**4817A**	58MV(B,C)060−14	42,000	12.5	14.5	42,000	3 84	8.4	26,400	2.62
3646095	25HBC542A**30	CAP**4817A**	58PH*070−16	41,500	12.0	14.0	42,000	3.76	8.2	26,600	2.56
3646163	25HBC542A**30	CAP**4817A**	58UVB060−14	42,000	12.5	14.5	42,000	3 84	8.4	26,400	2.62
4804741	25HBC542A**30	CAP**4817A**	59*N*A060V17**14	41,000	11.8	14.2	42,000	3 68	8.2	26,200	2.54
4804742	25HBC542A**30	CAP**4817A**	59*N*A080V17**14	41,500	12.0	14.5	42,000	3.72	8.2	26,000	2.56
4804743	25HBC542A**30	CAP**4817A**	59*P5A060E17**14	41,500	11.8	14.2	42,000	3.74	8.2	26,400	2.56
4804744	25HBC542A**30	CAP**4817A**	59*P5A080E17**16	42,000	12.0	14.5	42,000	3.78	8.2	26,400	2.58
3646128	25HBC542A**30	CAP**4817A**+TDR		42,000	11.5	13.5	42,000	3 80	8.2	27,200	2.58
3645982	25HBC542A**30	CAP**4821A**	58CV(A,X)110−20	41,500	12.5	15.0	42,000	3.78	8.5	26,000	2.60
4194278	25HBC542A**30	CAP**4821A**	58HDV080−−20	42,000	12.0	14.5	42,000	3 82	8.5	26,400	2.60
3646033	25HBC542A**30	CAP**4821A**	58ME(B,C)100−20	41,500	12.5	15.0	42,000	3 82	8.5	26,000	2.64
3646055	25HBC542A**30	CAP**4821A**	58MV(B,C)080−14	41,500	12.0	14.0	42,000	3.72	8.2	26,200	2.56
3646063	25HBC542A**30	CAP**4821A**	58MV(B,C)080−20	41,500	12.0	14.5	42,000	3.74	8.2	26,200	2.58
3646071	25HBC542A**30	CAP**4821A**	58MV(B,C)100−20	41,000	12.0	14.5	42,000	3.72	8.3	25,800	2.56
3646102	25HBC542A**30	CAP**4821A**	58PH*090−16	41,500	12.5	15.0	42,000	3 80	8.5	26,000	2.62
3646110	25HBC542A**30	CAP**4821A**	58PH*110−20	41,500	12.5	15.0	42,000	3 82	8.5	25,800	2.64
3646164	25HBC542A**30	CAP**4821A**	58UVB080−14	41,500	12.0	14.0	42,000	3.72	8.2	26,200	2.56
3646165	25HBC542A**30	CAP**4821A**	58UVB080−20	41,500	12.0	14.5	42,000	3.74	8.2	26,200	2.58
3646166	25HBC542A**30	CAP**4821A**	58UVB100−20	41,000	12.0	14.5	42,000	3.72	8.3	25,800	2.56
3810555	25HBC542A**30	CAP**4821A**	58VLR120−20	41,500	12.5	14.5	42,000	3.78	8.5	25,800	2.60
3810554	25HBC542A**30	CAP**4821A**	58VMR120−20	41,500	12.0	14.5	42,000	3.76	8.5	25,800	2.60
4804745	25HBC542A**30	CAP**4821A**	59*N*A060V17**14	41,000	11.8	14.2	42,000	3 64	8.2	26,000	2.52
4804746	25HBC542A**30	CAP**4821A**	59*N*A080V17**14	41,000	11.8	14.2	42,000	3 68	8.2	26,000	2.54
4804747	25HBC542A**30	CAP**4821A**	59*N*A100V21**20	41,000	12.0	14.5	42,000	3.72	8.2	25,800	2.56
4804748	25HBC542A**30	CAP**4821A**	59*P5A060E17**14	41,500	11.8	14.2	42,000	3.70	8.2	26,400	2.54
4804749	25HBC542A**30	CAP**4821A**	59*P5A080E17**16	41,500	11.8	14.2	42,000	3.74	8.2	26,400	2.56
4804750	25HBC542A**30	CAP**4821A**	59*P5A100E21**16	41,000	12.0	14.5	42,000	3.72	8.2	26,000	2.56
3646129	25HBC542A**30	CAP**4821A**+TDR		42,000	11.5	14.0	42,000	3.74	8.2	27,000	2.54
3646006	25HBC542A**30	CAP**4823A**	58HDV080−−20	42,000	12.0	14.5	42,000	3 82	8.4	26,400	2.60
4194281	25HBC542A**30	CAP**4823A**	58HDV100−−20	41,500	12.5	14.5	42,000	3 80	8.5	26,000	2.60
4804755	25HBC542A**30	CAP**4823A**	59*N*A100V21**20	41,000	12.0	14.5	42,000	3.72	8.2	25,800	2.56
4804756	25HBC542A**30	CAP**4823A**	59*N*A120V24**22	41,000	12.0	14.5	42,000	3.74	8.5	25,800	2.58
4804757	25HBC542A**30	CAP**4823A**	59*P5A100E21**16	41,000	12.0	14.5	42,000	3.72	8.2	26,000	2.56
4804758	25HBC542A**30	CAP**4823A**	59*P5A120E24**22	42,000	12.0	14.5	42,000	3 82	8.5	26,200	2.62

See notes on page 36

COMBINATION RATINGS CONTINUED

AHRI Ref. No.	Model Number	Coil Model Number	Furnace Model Number	Cooling Capacity	EER	SEER	High Temp		HSPF	Low Temp	
							E Capacity	E COP		H Capacity	H COP
3646130	25HBC542A**30	CAP**4823A**+TDR		42,000	11.5	14.0	42,000	3.74	8.2	27,000	2.54
3645991	25HBC542A**30	CAP**4824A**	58CV(A,X)135–22	41,500	12.5	15.0	42,000	3 82	8.5	25,800	2.64
3645999	25HBC542A**30	CAP**4824A**	58CV(A,X)155–22	41,500	12.5	15.0	42,000	3 82	8.5	25,600	2.64
4194279	25HBC542A**30	CAP**4824A**	58HDV080––20	42,000	12.0	14.5	42,000	3 84	8.5	26,400	2.62
4194280	25HBC542A**30	CAP**4824A**	58HDV100––20	42,000	12.5	14.5	42,000	3 82	8.5	26,200	2.62
3646041	25HBC542A**30	CAP**4824A**	58ME(B,C)120–20	42,000	12.5	15.0	42,000	3 88	8.6	26,000	2.66
3646080	25HBC542A**30	CAP**4824A**	58MV(B,C)120–20	41,500	12.5	15.0	42,000	3.78	8.5	25,800	2.60
3646088	25HBC542A**30	CAP**4824A**	58MVB040–14	41,000	12.0	14.5	42,000	3.72	8.3	26,000	2.56
3646119	25HBC542A**30	CAP**4824A**	58PH*135–20	42,000	12.5	15.0	42,000	3 84	8.5	26,000	2.64
3646167	25HBC542A**30	CAP**4824A**	58UVB120–20	41,500	12.5	15.0	42,000	3.78	8.5	25,800	2.60
4804751	25HBC542A**30	CAP**4824A**	59*N*A100V21**20	41,000	12.0	14.5	42,000	3.72	8.2	25,800	2.58
4804752	25HBC542A**30	CAP**4824A**	59*N*A120V24**22	41,000	12.0	14.5	42,000	3.74	8.5	25,600	2.60
4804753	25HBC542A**30	CAP**4824A**	59*P5A100E21**16	41,500	12.0	14.5	42,000	3.74	8.2	26,000	2.58
4804754	25HBC542A**30	CAP**4824A**	59*P5A120E24**22	42,000	12.5	15.0	42,000	3 84	8.5	26,200	2.62
3646131	25HBC542A**30	CAP**4824A**+TDR		42,000	11.5	14.0	42,000	3.74	8.2	27,000	2.54
3645971	25HBC542A**30	CNPH*4221A**	58CV(A,X)070–12	40,500	11.8	14.0	42,000	3 60	8.0	26,000	2.50
3645976	25HBC542A**30	CNPH*4221A**	58CV(A,X)090–16	41,000	12.0	14.5	42,000	3 66	8.2	25,800	2.54
3645983	25HBC542A**30	CNPH*4221A**	58CV(A,X)110–20	41,000	12.0	14.5	42,000	3 66	8.2	25,800	2.56
3645992	25HBC542A**30	CNPH*4221A**	58CV(A,X)135–22	41,000	12.0	14.5	42,000	3.70	8.2	25,600	2.58
3646000	25HBC542A**30	CNPH*4221A**	58CV(A,X)155–22	41,000	12.0	14.5	42,000	3.70	8.2	25,600	2.58
3756367	25HBC542A**30	CNPH*4221A**	58HDV080––20	41,000	12.0	14.0	42,000	3 68	8.2	26,200	2.56
3756368	25HBC542A**30	CNPH*4221A**	58HDV100––20	41,000	12.2	14.5	42,000	3 68	8.2	26,000	2.56
3646009	25HBC542A**30	CNPH*4221A**	58ME(B,C)040–12	41,000	12.0	14.0	42,000	3 68	8.2	26,000	2.56
3646015	25HBC542A**30	CNPH*4221A**	58ME(B,C)060–12	41,000	12.0	14.0	42,000	3 68	8.2	26,000	2.56
3646021	25HBC542A**30	CNPH*4221A**	58ME(B,C)080–12	41,000	12.0	14.5	42,000	3 68	8.2	26,000	2.56
3646027	25HBC542A**30	CNPH*4221A**	58ME(B,C)080–16	41,000	12.0	14.0	42,000	3 66	8.2	25,800	2.54
3646034	25HBC542A**30	CNPH*4221A**	58ME(B,C)100–20	41,000	12.0	14.5	42,000	3.70	8.3	25,800	2.58
3646042	25HBC542A**30	CNPH*4221A**	58ME(B,C)120–20	41,000	12.5	14.5	42,000	3.72	8.3	25,800	2.60
3646428	25HBC542A**30	CNPH*4221A**	58MEB040–12	41,000	12.0	14.0	42,000	3 68	8.2	26,000	2.56
3646049	25HBC542A**30	CNPH*4221A**	58MV(B,C)060–14	41,000	12.0	14.0	42,000	3 68	8.2	26,000	2.54
3646056	25HBC542A**30	CNPH*4221A**	58MV(B,C)080–14	40,500	11.8	14.0	42,000	3 60	8.1	26,000	2.50
3646064	25HBC542A**30	CNPH*4221A**	58MV(B,C)080–20	40,500	12.0	14.0	42,000	3 64	8.1	26,000	2.52
3646072	25HBC542A**30	CNPH*4221A**	58MV(B,C)100–20	40,500	12.0	14.0	42,000	3 60	8.1	25,800	2.52
3646081	25HBC542A**30	CNPH*4221A**	58MV(B,C)120–20	41,000	12.0	14.5	42,000	3 66	8.2	25,800	2.54
3646089	25HBC542A**30	CNPH*4221A**	58MVB040–14	40,500	12.0	14.0	42,000	3 60	8.0	26,000	2.50
3646096	25HBC542A**30	CNPH*4221A**	58PH*070–16	40,500	11.5	13.5	42,000	3 60	8.0	26,400	2.50
3646103	25HBC542A**30	CNPH*4221A**	58PH*090–16	41,000	12.0	14.5	42,000	3 68	8.2	25,800	2.56
3646111	25HBC542A**30	CNPH*4221A**	58PH*110–20	41,000	12.0	14.5	42,000	3.70	8.2	25,600	2.58
3646120	25HBC542A**30	CNPH*4221A**	58PH*135–20	41,000	12.0	14.5	42,000	3 68	8.2	25,800	2.56
3810561	25HBC542A**30	CNPH*4221A**	58VLR120–20	41,000	12.0	14.5	42,000	3 66	8.2	25,600	2.56
3810560	25HBC542A**30	CNPH*4221A**	58VMR120–20	40,500	12.0	14.5	42,000	3 64	8.2	25,600	2.54
4804783	25HBC542A**30	CNPH*4221A**	59*N*A060V17**14	40,000	11.4	13.7	42,000	3 54	8.0	26,000	2.46
4804784	25HBC542A**30	CNPH*4221A**	59*N*A080V17**14	40,500	11.5	14.0	42,000	3 56	8.0	25,800	2.50
4804785	25HBC542A**30	CNPH*4221A**	59*N*A100V21**20	40,500	11.8	14.2	42,000	3 60	8.2	25,800	2.52
4804786	25HBC542A**30	CNPH*4221A**	59*N*A120V24**22	40,500	12.0	14.5	42,000	3 62	8.2	25,600	2.54
4804787	25HBC542A**30	CNPH*4221A**	59*P5A060E17**14	40,500	11.4	13.7	42,000	3 58	8.2	26,200	2.50
4804788	25HBC542A**30	CNPH*4221A**	59*P5A080E17**16	41,000	11.5	14.0	42,000	3 62	8.2	26,200	2.52
4804789	25HBC542A**30	CNPH*4221A**	59*P5A100E21**16	40,500	11.8	14.2	42,000	3 60	8.2	25,800	2.52
4804790	25HBC542A**30	CNPH*4221A**	59*P5A120E24**22	41,000	12.0	14.5	42,000	3 68	8.2	26,000	2.56
4194298	25HBC542A**30	CNPH*4221A**	OVLAAB048112	41,000	11.5	13.5	42,000	3 64	8.2	26,400	2.52
4194299	25HBC542A**30	CNPH*4221A**	OVLAAB060154	42,000	12.0	14.5	42,000	3.76	8.2	26,600	2.58
4194297	25HBC542A**30	CNPH*4221A**	OVMAAB042112	40,500	12.0	14.0	42,000	3 62	8.2	26,000	2.52
3646133	25HBC542A**30	CNPH*4221A**+TDR		41,000	11.5	13.5	42,000	3 64	8.0	27,000	2.50
3756369	25HBC542A**30	CNPH*4321A**	58HDV080––20	42,000	12.5	15.0	42,000	3 92	8.6	26,600	2.66
3756370	25HBC542A**30	CNPH*4321A**	58HDV100––20	42,000	12.5	15.0	42,000	3 90	8.5	26,200	2.66
3810563	25HBC542A**30	CNPH*4321A**	58VLR120–20	42,000	12.5	15.0	42,000	3 88	8.5	26,000	2.66
3810562	25HBC542A**30	CNPH*4321A**	58VMR120–20	42,000	12.5	15.0	42,000	3 86	8.5	26,000	2.64
4804791	25HBC542A**30	CNPH*4321A**	59*N*A060V17**14	41,500	12.0	14.5	42,000	3.74	8.2	26,200	2.56
4804792	25HBC542A**30	CNPH*4321A**	59*N*A080V17**14	41,500	12.0	14.5	42,000	3.78	8.2	26,000	2.58
4804793	25HBC542A**30	CNPH*4321A**	59*N*A100V21**20	42,000	12.5	15.0	42,000	3 82	8.5	26,000	2.62
4804794	25HBC542A**30	CNPH*4321A**	59*N*A120V24**22	42,000	12.5	15.2	42,000	3 84	8.5	25,800	2.64
4804795	25HBC542A**30	CNPH*4321A**	59*P5A060E17**14	42,000	12.0	14.5	42,000	3 80	8.5	26,600	2.58
4804796	25HBC542A**30	CNPH*4321A**	59*P5A080E17**16	42,000	12.0	14.5	42,000	3 84	8.5	26,600	2.62
4804797	25HBC542A**30	CNPH*4321A**	59*P5A100E21**16	42,000	12.5	15.0	42,000	3 82	8.5	26,200	2.62
4804798	25HBC542A**30	CNPH*4321A**	59*P5A120E24**22	42,000	12.5	15.2	42,000	3 92	8.5	26,400	2.66
4194301	25HBC542A**30	CNPH*4321A**	OVLAAB048112	42,000	12.0	14.5	42,000	3 84	8.5	26,600	2.62
4194302	25HBC542A**30	CNPH*4321A**	OVLAAB060154	42,000	12.5	15.0	42,000	4 00	8.5	26,800	2.70
4194300	25HBC542A**30	CNPH*4321A**	OVMAAB042112	42,000	12.5	14.5	42,000	3 84	8.5	26,400	2.62
3645972	25HBC542A**30	CNPH*4821A**	58CV(A,X)070–12	41,500	12.0	14.5	42,000	3.72	8.3	26,000	2.58
3645977	25HBC542A**30	CNPH*4821A**	58CV(A,X)090–16	41,500	12.0	14.5	42,000	3.78	8.4	25,800	2.62
3645984	25HBC542A**30	CNPH*4821A**	58CV(A,X)110–20	41,500	12.5	15.0	42,000	3 80	8.5	25,800	2.62
3645993	25HBC542A**30	CNPH*4821A**	58CV(A,X)135–22	41,500	12.5	15.0	42,000	3 82	8.5	25,800	2.64
3646001	25HBC542A**30	CNPH*4821A**	58CV(A,X)155–22	41,500	12.5	15.0	42,000	3 82	8.5	25,600	2.64
3756371	25HBC542A**30	CNPH*4821A**	58HDV080––20	42,000	12.2	14.5	42,000	3 84	8.4	26,400	2.62
3756372	25HBC542A**30	CNPH*4821A**	58HDV100––20	42,000	12.5	15.0	42,000	3 82	8.5	26,200	2.62
3646010	25HBC542A**30	CNPH*4821A**	58ME(B,C)040–12	42,000	12.0	14.5	42,000	3 82	8.4	26,200	2.62
3646016	25HBC542A**30	CNPH*4821A**	58ME(B,C)060–12	42,000	12.0	14.5	42,000	3 82	8.3	26,200	2.62
3646022	25HBC542A**30	CNPH*4821A**	58ME(B,C)080–12	42,000	12.0	14.5	42,000	3 82	8.4	26,200	2.62
3646028	25HBC542A**30	CNPH*4821A**	58ME(B,C)080–16	41,500	12.0	14.5	42,000	3 80	8.3	26,000	2.62
3646035	25HBC542A**30	CNPH*4821A**	58ME(B,C)100–20	42,000	12.5	15.0	42,000	3 86	8.5	26,000	2.66

See notes on page 36

COMBINATION RATINGS CONTINUED

AHRI Ref. No.	Model Number	Coil Model Number	Furnace Model Number	Cooling Capacity	EER	SEER	High Temp		HSPF	Low Temp	
							E Capacity	E COP		H Capacity	H COP
3646043	25HBC542A**30	CNPH*4821A**	58ME(B,C)120−20	42,000	12.5	15.0	42,000	3 88	8.6	26,000	2.66
3646429	25HBC542A**30	CNPH*4821A**	58MEB040−12	42,000	12.0	14.5	42,000	3 82	8.4	26,200	2.62
3646050	25HBC542A**30	CNPH*4821A**	58MV(B,C)060−14	42,000	12.5	14.5	42,000	3 80	8.3	26,200	2.62
3646057	25HBC542A**30	CNPH*4821A**	58MV(B,C)080−14	41,500	12.0	14.5	42,000	3.74	8.2	26,200	2.58
3646065	25HBC542A**30	CNPH*4821A**	58MV(B,C)080−20	41,500	12.0	14.5	42,000	3.76	8.2	26,000	2.60
3646073	25HBC542A**30	CNPH*4821A**	58MV(B,C)100−20	41,500	12.0	14.5	42,000	3.74	8.3	25,800	2.58
3646082	25HBC542A**30	CNPH*4821A**	58MV(B,C)120−20	41,500	12.5	14.5	42,000	3.78	8.5	25,800	2.62
3646090	25HBC542A**30	CNPH*4821A**	58MVB040−14	41,500	12.0	14.5	42,000	3.72	8.3	26,000	2.58
3646097	25HBC542A**30	CNPH*4821A**	58PH*070−16	41,500	12.0	14.0	42,000	3.72	8.1	26,600	2.56
3646104	25HBC542A**30	CNPH*4821A**	58PH*090−16	42,000	12.5	15.0	42,000	3 82	8.5	26,000	2.64
3646112	25HBC542A**30	CNPH*4821A**	58PH*110−20	42,000	12.5	15.0	42,000	3 86	8.5	26,000	2.66
3646121	25HBC542A**30	CNPH*4821A**	58PH*135−20	42,000	12.5	15.0	42,000	3 84	8.5	26,000	2.64
3810565	25HBC542A**30	CNPH*4821A**	58VLR120−20	41,500	12.5	15.0	42,000	3 80	8.5	25,800	2.62
3810564	25HBC542A**30	CNPH*4821A**	58VMR120−20	41,500	12.5	15.0	42,000	3.76	8.5	25,800	2.60
4804799	25HBC542A**30	CNPH*4821A**	59*N*A060V17**14	41,000	11.8	14.2	42,000	3 66	8.2	26,000	2.54
4804800	25HBC542A**30	CNPH*4821A**	59*N*A080V17**14	41,000	12.0	14.5	42,000	3.70	8.2	26,000	2.56
4804801	25HBC542A**30	CNPH*4821A**	59*N*A100V21**20	41,500	12.0	14.5	42,000	3.72	8.2	25,800	2.58
4804802	25HBC542A**30	CNPH*4821A**	59*N*A120V24**22	41,500	12.5	15.0	42,000	3.76	8.5	25,600	2.60
4804803	25HBC542A**30	CNPH*4821A**	59*P5A060E17**14	41,500	11.8	14.2	42,000	3.72	8.2	26,400	2.56
4804804	25HBC542A**30	CNPH*4821A**	59*P5A080E17**16	41,500	12.0	14.5	42,000	3.76	8.5	26,400	2.58
4804805	25HBC542A**30	CNPH*4821A**	59*P5A100E21**16	41,500	12.0	14.5	42,000	3.74	8.2	26,000	2.58
4804806	25HBC542A**30	CNPH*4821A**	59*P5A120E24**22	42,000	12.5	15.0	42,000	3 84	8.5	26,200	2.64
4194304	25HBC542A**30	CNPH*4821A**	OVLAAB048112	42,000	12.0	14.5	42,000	3.76	8.2	26,400	2.58
4194305	25HBC542A**30	CNPH*4821A**	OVLAAB060154	42,000	12.5	15.0	42,000	3 90	8.5	26,600	2.66
4194303	25HBC542A**30	CNPH*4821A**	OVMAAB042112	41,500	12.0	14.5	42,000	3.76	8.2	26,200	2.58
3646134	25HBC542A**30	CNPH*4821A**+TDR		42,000	11.5	14.0	42,000	3.74	8.2	27,000	2.54
3645978	25HBC542A**30	CNPV*4217A**	58CV(A,X)090−16	41,000	12.0	14.5	42,000	3.72	8.3	25,800	2.58
4194282	25HBC542A**30	CNPV*4217A**	58HDV060−−12	41,000	11.5	13.5	42,000	3 64	8.2	26,600	2.52
3646011	25HBC542A**30	CNPV*4217A**	58ME(B,C)040−12	41,500	12.0	14.5	42,000	3.74	8.2	26,200	2.58
3646017	25HBC542A**30	CNPV*4217A**	58ME(B,C)060−12	41,500	12.0	14.5	42,000	3.72	8.2	26,200	2.58
3646023	25HBC542A**30	CNPV*4217A**	58ME(B,C)080−12	41,500	12.0	14.5	42,000	3.74	8.3	26,000	2.58
3646029	25HBC542A**30	CNPV*4217A**	58ME(B,C)080−16	41,000	12.0	14.5	42,000	3.72	8.3	26,000	2.58
3646430	25HBC542A**30	CNPV*4217A**	58MEB040−12	41,500	12.0	14.5	42,000	3.74	8.2	26,200	2.58
3646051	25HBC542A**30	CNPV*4217A**	58MV(B,C)060−14	41,500	12.0	14.5	42,000	3.72	8.2	26,200	2.58
3646098	25HBC542A**30	CNPV*4217A**	58PH*070−16	41,000	11.5	13.5	42,000	3 64	8.0	26,400	2.52
3646168	25HBC542A**30	CNPV*4217A**	58UVB060−14	41,500	12.0	14.5	42,000	3.72	8.2	26,200	2.58
4804759	25HBC542A**30	CNPV*4217A**	59*N*A060V17**14	40,500	11.5	14.0	42,000	3 58	8.2	26,000	2.50
4804760	25HBC542A**30	CNPV*4217A**	59*N*A080V17**14	40,500	11.8	14.2	42,000	3 62	8.2	26,000	2.52
4804761	25HBC542A**30	CNPV*4217A**	59*P5A060E17**14	41,000	11.5	14.0	42,000	3 64	8.2	26,200	2.52
4804762	25HBC542A**30	CNPV*4217A**	59*P5A080E17**16	41,000	11.8	14.2	42,000	3 68	8.2	26,200	2.54
4194288	25HBC542A**30	CNPV*4217A**	OVMAAB042112	41,000	12.0	14.0	42,000	3 66	8.2	26,200	2.54
3646135	25HBC542A**30	CNPV*4217A**+TDR		41,500	11.5	13.5	42,000	3.70	8.1	27,000	2.54
3645985	25HBC542A**30	CNPV*4221A**	58CV(A,X)110−20	41,000	12.0	14.5	42,000	3 66	8.2	25,800	2.56
4194283	25HBC542A**30	CNPV*4221A**	58HDV060−−12	40,500	11.5	13.5	42,000	3 60	8.0	26,400	2.50
4194284	25HBC542A**30	CNPV*4221A**	58HDV080−−20	41,000	12.0	14.0	42,000	3 68	8.2	26,200	2.56
3646036	25HBC542A**30	CNPV*4221A**	58ME(B,C)100−20	41,000	12.0	14.5	42,000	3.70	8.3	25,800	2.58
3646058	25HBC542A**30	CNPV*4221A**	58MV(B,C)080−14	40,500	11.8	14.0	42,000	3 60	8.1	26,000	2.50
3646066	25HBC542A**30	CNPV*4221A**	58MV(B,C)080−20	41,000	12.0	14.0	42,000	3 64	8.1	26,000	2.52
3646074	25HBC542A**30	CNPV*4221A**	58MV(B,C)100−20	40,500	12.0	14.0	42,000	3 60	8.1	25,800	2.52
3646105	25HBC542A**30	CNPV*4221A**	58PH*090−16	41,000	12.0	14.5	42,000	3 68	8.2	25,800	2.56
3646113	25HBC542A**30	CNPV*4221A**	58PH*110−20	41,000	12.0	14.5	42,000	3.70	8.2	25,600	2.58
3646169	25HBC542A**30	CNPV*4221A**	58UVB080−14	40,500	11.8	14.0	42,000	3 60	8.1	26,000	2.50
3646170	25HBC542A**30	CNPV*4221A**	58UVB080−20	41,000	12.0	14.0	42,000	3 64	8.1	26,000	2.52
3646171	25HBC542A**30	CNPV*4221A**	58UVB100−20	40,500	12.0	14.0	42,000	3 60	8.1	25,800	2.52
3810557	25HBC542A**30	CNPV*4221A**	58VLR120−20	41,000	12.0	14.5	42,000	3 66	8.2	25,600	2.56
3810556	25HBC542A**30	CNPV*4221A**	58VMR120−20	40,500	12.0	14.5	42,000	3 64	8.2	25,600	2.54
4804763	25HBC542A**30	CNPV*4221A**	59*N*A060V17**14	40,000	11.4	13.7	42,000	3 54	8.0	26,000	2.46
4804764	25HBC542A**30	CNPV*4221A**	59*N*A080V17**14	40,500	11.5	14.0	42,000	3 56	8.0	25,800	2.50
4804765	25HBC542A**30	CNPV*4221A**	59*N*A100V21**20	40,500	11.8	14.2	42,000	3 60	8.2	25,800	2.52
4804766	25HBC542A**30	CNPV*4221A**	59*P5A060E17**14	40,500	11.4	13.7	42,000	3 58	8.2	26,200	2.50
4804767	25HBC542A**30	CNPV*4221A**	59*P5A080E17**16	41,000	11.5	14.0	42,000	3 62	8.2	26,200	2.52
4804768	25HBC542A**30	CNPV*4221A**	59*P5A100E21**16	40,500	11.8	14.2	42,000	3 60	8.2	25,800	2.52
4194290	25HBC542A**30	CNPV*4221A**	OVLAAB048112	41,000	11.5	13.5	42,000	3 64	8.2	26,400	2.52
4194289	25HBC542A**30	CNPV*4221A**	OVMAAB042112	40,500	12.0	14.0	42,000	3 62	8.2	26,000	2.52
3646136	25HBC542A**30	CNPV*4221A**+TDR		41,000	11.5	13.5	42,000	3 64	8.0	27,000	2.50
3645986	25HBC542A**30	CNPV*4324A**	58CV(A,X)110−20	42,000	12.5	15.0	42,000	3 90	8.5	26,000	2.68
3645994	25HBC542A**30	CNPV*4324A**	58CV(A,X)135−22	42,000	13.0	15.5	42,000	3 94	8.7	25,800	2.70
3646002	25HBC542A**30	CNPV*4324A**	58CV(A,X)155−22	42,000	13.0	15.5	42,000	3 94	8.7	25,800	2.70
4194285	25HBC542A**30	CNPV*4324A**	58HDV080−−20	42,000	12.5	15.0	42,000	3 94	8.5	26,600	2.68
4149635	25HBC542A**30	CNPV*4324A**	58HDV100−−20	42,000	12.5	15.0	42,000	3 92	8.6	26,200	2.68
3756365	25HBC542A**30	CNPV*4324A**	58HDV100−−20 (DWNFLW ONLY)	42,000	12.5	15.0	42,000	3 92	8.6	26,200	2.68
3646044	25HBC542A**30	CNPV*4324A**	58ME(B,C)120−20	42,000	13.0	15.5	42,000	4 00	8.7	26,200	2.72
3646075	25HBC542A**30	CNPV*4324A**	58MV(B,C)100−20	42,000	12.5	15.0	42,000	3 84	8.5	26,000	2.62
3646083	25HBC542A**30	CNPV*4324A**	58MV(B,C)120−20	42,000	12.5	15.0	42,000	3 88	8.5	26,000	2.66
3646091	25HBC542A**30	CNPV*4324A**	58MVB040−14	42,000	12.5	15.0	42,000	3 82	8.4	26,200	2.62
3646114	25HBC542A**30	CNPV*4324A**	58PH*110−20	42,000	13.0	15.5	42,000	3 96	8.6	26,000	2.70
3646122	25HBC542A**30	CNPV*4324A**	58PH*135−20	42,000	13.0	15.5	42,000	3 96	8.6	26,200	2.70
3646172	25HBC542A**30	CNPV*4324A**	58UVB100−20	42,000	12.5	15.0	42,000	3 84	8.5	26,000	2.62
3646173	25HBC542A**30	CNPV*4324A**	58UVB120−20	42,000	12.5	15.0	42,000	3 88	8.5	26,000	2.66

See notes on page 36

COMBINATION RATINGS CONTINUED

AHRI Ref. No.	Model Number	Coil Model Number	Furnace Model Number	Cooling Capacity	EER	SEER	High Temp		HSPF	Low Temp	
							E Capacity	E COP		H Capacity	H COP
4804769	25HBC542A**30	CNPV*4324A**	59*N*A100V21**20	42,000	12.5	15.0	42,000	3 82	8.5	26,000	2.62
4804770	25HBC542A**30	CNPV*4324A**	59*N*A120V24**22	42,000	12.5	15.2	42,000	3 84	8.5	25,800	2.64
4804771	25HBC542A**30	CNPV*4324A**	59*P5A100E21**16	42,000	12.5	15.0	42,000	3 84	8.5	26,200	2.62
4804772	25HBC542A**30	CNPV*4324A**	59*P5A120E24**22	42,000	12.7	15.5	42,000	3 96	8.8	26,400	2.68
4194291	25HBC542A**30	CNPV*4324A**	OVLAAB048112	42,000	12.5	14.5	42,000	3 86	8.5	26,600	2.62
4194292	25HBC542A**30	CNPV*4324A**	OVLAAB060154	42,000	12.5	15.0	42,000	4 02	8.5	26,800	2.72
3646137	25HBC542A**30	CNPV*4324A**		42,000	12.0	14.0	42,000	3 82	8.4	27,400	2.60
3645987	25HBC542A**30	CNPV*4821A**	58CV(A,X)110–20	41,500	12.5	15.0	42,000	3 80	8.5	25,800	2.62
4194286	25HBC542A**30	CNPV*4821A**	58HDV080––20	42,000	12.5	14.5	42,000	3 84	8.5	26,400	2.62
3646037	25HBC542A**30	CNPV*4821A**	58ME(B,C)100–20	42,000	12.5	15.0	42,000	3 86	8.5	26,000	2.66
3646059	25HBC542A**30	CNPV*4821A**	58MV(B,C)080–14	41,500	12.0	14.5	42,000	3.74	8.2	26,200	2.58
3646067	25HBC542A**30	CNPV*4821A**	58MV(B,C)080–20	41,500	12.0	14.5	42,000	3.76	8.2	26,000	2.60
3646076	25HBC542A**30	CNPV*4821A**	58MV(B,C)100–20	41,500	12.0	14.5	42,000	3.74	8.3	25,800	2.58
3646106	25HBC542A**30	CNPV*4821A**	58PH*090–16	42,000	12.5	15.0	42,000	3 82	8.5	26,000	2.64
3646115	25HBC542A**30	CNPV*4821A**	58PH*110–20	42,000	12.5	15.0	42,000	3 86	8.5	26,000	2.66
3646174	25HBC542A**30	CNPV*4821A**	58UVB080–14	41,500	12.0	14.5	42,000	3.74	8.2	26,200	2.58
3646175	25HBC542A**30	CNPV*4821A**	58UVB080–20	41,500	12.0	14.5	42,000	3.76	8.2	26,000	2.60
3646176	25HBC542A**30	CNPV*4821A**	58UVB100–20	41,500	12.0	14.5	42,000	3.74	8.3	25,800	2.58
3810559	25HBC542A**30	CNPV*4821A**	58VLR120–20	41,500	12.5	15.0	42,000	3 80	8.5	25,800	2.62
3810558	25HBC542A**30	CNPV*4821A**	58VMR120–20	41,500	12.5	15.0	42,000	3.76	8.5	25,800	2.60
4804773	25HBC542A**30	CNPV*4821A**	59*N*A060V17**14	41,000	11.8	14.2	42,000	3 66	8.2	26,000	2.54
4804774	25HBC542A**30	CNPV*4821A**	59*N*A080V17**14	41,000	12.0	14.5	42,000	3.70	8.2	26,000	2.56
4804775	25HBC542A**30	CNPV*4821A**	59*N*A100V21**20	41,500	12.0	14.5	42,000	3.72	8.2	25,800	2.58
4804776	25HBC542A**30	CNPV*4821A**	59*P5A060E17**14	41,500	11.8	14.2	42,000	3.72	8.2	26,400	2.56
4804777	25HBC542A**30	CNPV*4821A**	59*P5A080E17**16	41,500	12.0	14.5	42,000	3.76	8.2	26,400	2.58
4804778	25HBC542A**30	CNPV*4821A**	59*P5A100E21**16	41,500	12.0	14.5	42,000	3.74	8.2	26,000	2.58
4194294	25HBC542A**30	CNPV*4821A**	OVLAAB048112	42,000	12.0	14.5	42,000	3.76	8.2	26,400	2.58
4194293	25HBC542A**30	CNPV*4821A**	OVMAAB042112	41,500	12.0	14.5	42,000	3.76	8.2	26,200	2.58
3646138	25HBC542A**30	CNPV*4821A**+TDR		42,000	11.5	14.0	42,000	3.74	8.2	27,000	2.54
3645995	25HBC542A**30	CNPV*4824A**	58CV(A,X)135–22	41,500	12.5	15.0	42,000	3 82	8.5	25,800	2.64
3646003	25HBC542A**30	CNPV*4824A**	58CV(A,X)155–22	41,500	12.5	15.0	42,000	3 82	8.5	25,600	2.64
4194287	25HBC542A**30	CNPV*4824A**	58HDV080––20	42,000	12.5	14.5	42,000	3 84	8.5	26,400	2.62
4149636	25HBC542A**30	CNPV*4824A**	58HDV100––20	42,000	12.5	15.0	42,000	3 82	8.5	26,200	2.62
3756366	25HBC542A**30	CNPV*4824A**	58HDV100––20 (DWNFLW ONLY)	42,000	12.5	15.0	42,000	3 82	8.5	26,200	2.62
3646045	25HBC542A**30	CNPV*4824A**	58ME(B,C)120–20	42,000	12.5	15.0	42,000	3 88	8.6	26,000	2.66
3646084	25HBC542A**30	CNPV*4824A**	58MV(B,C)120–20	41,500	12.5	15.0	42,000	3.78	8.5	25,800	2.62
3646092	25HBC542A**30	CNPV*4824A**	58MVB040–14	41,500	12.0	14.5	42,000	3.72	8.3	26,000	2.58
3646123	25HBC542A**30	CNPV*4824A**	58PH*135–20	42,000	12.5	15.0	42,000	3 84	8.5	26,000	2.64
3646177	25HBC542A**30	CNPV*4824A**	58UVB120–20	41,500	12.5	15.0	42,000	3.78	8.5	25,800	2.62
4804779	25HBC542A**30	CNPV*4824A**	59*N*A100V21**20	41,500	12.0	14.5	42,000	3.72	8.2	25,800	2.58
4804780	25HBC542A**30	CNPV*4824A**	59*N*A120V24**22	41,500	12.5	15.0	42,000	3.76	8.5	25,600	2.60
4804781	25HBC542A**30	CNPV*4824A**	59*P5A100E21**16	41,500	12.0	14.5	42,000	3.74	8.2	26,000	2.58
4804782	25HBC542A**30	CNPV*4824A**	59*P5A120E24**22	42,000	12.5	15.0	42,000	3 84	8.5	26,200	2.64
4194295	25HBC542A**30	CNPV*4824A**	OVLAAB048112	42,000	12.0	14.5	42,000	3.76	8.2	26,400	2.58
4194296	25HBC542A**30	CNPV*4824A**	OVLAAB060154	42,000	12.5	15.0	42,000	3 90	8.7	26,600	2.66
3646139	25HBC542A**30	CNPV*4824A**+TDR		42,000	11.5	14.0	42,000	3.74	8.2	27,000	2.54
3645973	25HBC542A**30	CSPH*4212A**	58CV(A,X)070–12	41,000	12.0	14.0	42,000	3.72	8.1	26,200	2.56
3645979	25HBC542A**30	CSPH*4212A**	58CV(A,X)090–16	41,500	12.0	14.5	42,000	3.78	8.3	26,000	2.62
3645988	25HBC542A**30	CSPH*4212A**	58CV(A,X)110–20	41,500	12.0	14.5	42,000	3 80	8.3	26,000	2.62
3645996	25HBC542A**30	CSPH*4212A**	58CV(A,X)135–22	41,500	12.0	14.5	42,000	3 82	8.3	25,800	2.64
3646004	25HBC542A**30	CSPH*4212A**	58CV(A,X)155–22	41,500	12.0	14.5	42,000	3 82	8.3	25,800	2.64
3756373	25HBC542A**30	CSPH*4212A**	58HDV080––20	41,000	12.0	14.0	42,000	3 82	8.2	26,400	2.62
3756374	25HBC542A**30	CSPH*4212A**	58HDV100––20	41,000	12.2	14.5	42,000	3 80	8.2	26,200	2.62
3646012	25HBC542A**30	CSPH*4212A**	58ME(B,C)040–12	41,500	12.0	14.5	42,000	3 82	8.3	26,200	2.62
3646018	25HBC542A**30	CSPH*4212A**	58ME(B,C)060–12	41,500	12.0	14.5	42,000	3 80	8.2	26,200	2.62
3646024	25HBC542A**30	CSPH*4212A**	58ME(B,C)080–12	41,500	12.0	14.5	42,000	3 82	8.3	26,200	2.62
3646030	25HBC542A**30	CSPH*4212A**	58ME(B,C)080–16	41,500	12.0	14.5	42,000	3 80	8.2	26,000	2.62
3646038	25HBC542A**30	CSPH*4212A**	58ME(B,C)100–20	41,500	12.0	14.5	42,000	3 84	8.4	26,000	2.64
3646046	25HBC542A**30	CSPH*4212A**	58ME(B,C)120–20	41,500	12.5	15.0	42,000	3 86	8.4	26,000	2.66
3646431	25HBC542A**30	CSPH*4212A**	58MEB040–12	41,500	12.0	14.5	42,000	3 82	8.3	26,200	2.62
3646052	25HBC542A**30	CSPH*4212A**	58MV(B,C)060–14	41,500	12.0	14.5	42,000	3 80	8.2	26,200	2.60
3646060	25HBC542A**30	CSPH*4212A**	58MV(B,C)080–14	41,000	12.0	14.0	42,000	3.74	8.1	26,200	2.58
3646068	25HBC542A**30	CSPH*4212A**	58MV(B,C)080–20	41,500	12.0	14.0	42,000	3.76	8.1	26,200	2.58
3646077	25HBC542A**30	CSPH*4212A**	58MV(B,C)100–20	41,000	12.0	14.0	42,000	3.72	8.2	26,000	2.58
3646085	25HBC542A**30	CSPH*4212A**	58MV(B,C)120–20	41,500	12.0	14.5	42,000	3.78	8.3	26,000	2.60
3646093	25HBC542A**30	CSPH*4212A**	58MVB040–14	41,000	12.0	14.0	42,000	3.72	8.1	26,000	2.56
3646099	25HBC542A**30	CSPH*4212A**	58PH*070–16	41,000	11.5	13.5	42,000	3.72	8.1	26,600	2.56
3646107	25HBC542A**30	CSPH*4212A**	58PH*090–16	41,500	12.0	14.5	42,000	3 82	8.3	26,000	2.62
3646116	25HBC542A**30	CSPH*4212A**	58PH*110–20	41,500	12.0	14.5	42,000	3 84	8.3	26,000	2.64
3646124	25HBC542A**30	CSPH*4212A**	58PH*135–20	41,500	12.0	14.5	42,000	3 82	8.3	26,000	2.62
3810567	25HBC542A**30	CSPH*4212A**	58VLR120–20	41,500	12.5	15.0	42,000	3.78	8.5	25,800	2.62
3810566	25HBC542A**30	CSPH*4212A**	58VMR120–20	41,500	12.5	14.5	42,000	3.76	8.5	25,800	2.60
4804807	25HBC542A**30	CSPH*4212A**	59*N*A060V17**14	41,000	11.8	14.2	42,000	3 66	8.2	26,200	2.52
4804808	25HBC542A**30	CSPH*4212A**	59*N*A080V17**14	41,000	12.0	14.5	42,000	3 68	8.2	26,000	2.54
4804809	25HBC542A**30	CSPH*4212A**	59*N*A100V21**20	41,500	12.0	14.5	42,000	3.72	8.2	26,000	2.58
4804810	25HBC542A**30	CSPH*4212A**	59*N*A120V24**22	41,500	12.5	15.0	42,000	3.74	8.5	25,800	2.60
4804811	25HBC542A**30	CSPH*4212A**	59*P5A060E17**14	41,500	11.8	14.2	42,000	3.70	8.2	26,400	2.54
4804812	25HBC542A**30	CSPH*4212A**	59*P5A080E17**16	42,000	12.0	14.5	42,000	3.74	8.2	26,400	2.58
4804813	25HBC542A**30	CSPH*4212A**	59*P5A100E21**16	41,500	12.0	14.5	42,000	3.74	8.2	26,000	2.58

See notes on page 36

COMBINATION RATINGS CONTINUED

AHRI Ref. No.	Model Number	Coil Model Number	Furnace Model Number	Cooling Capacity	EER	SEER	High Temp		HSPF	Low Temp	
							E Capacity	E COP		H Capacity	H COP
4804814	25HBC542A**30	CSPH*4212A**	59*P5A120E24**22	42,000	12.5	15.0	42,000	3 82	8.5	26,200	2.62
4194307	25HBC542A**30	CSPH*4212A**	OVLAAB048112	42,000	12.0	14.0	42,000	3.76	8.2	26,600	2.56
4194308	25HBC542A**30	CSPH*4212A**	OVLAAB060154	42,000	12.5	15.0	42,000	3 90	8.7	26,800	2.64
4194306	25HBC542A**30	CSPH*4212A**	OVMAAB042112	41,500	12.0	14.5	42,000	3.74	8.2	26,200	2.58
3646140	25HBC542A**30	CSPH*4212A**+TDR		41,000	11.5	13.5	42,000	3.76	8.0	27,200	2.56
3645974	25HBC542A**30	CSPH*4812A**	58CV(A,X)070–12	41,500	12.0	14.5	42,000	3.74	8.2	26,200	2.58
3645980	25HBC542A**30	CSPH*4812A**	58CV(A,X)090–16	41,500	12.5	15.0	42,000	3 82	8.4	26,000	2.62
3645989	25HBC542A**30	CSPH*4812A**	58CV(A,X)110–20	41,500	12.5	15.0	42,000	3 82	8.5	26,000	2.62
3645997	25HBC542A**30	CSPH*4812A**	58CV(A,X)135–22	42,000	12.5	15.0	42,000	3 86	8.5	25,800	2.64
3646005	25HBC542A**30	CSPH*4812A**	58CV(A,X)155–22	42,000	12.5	15.0	42,000	3 84	8.5	25,800	2.64
3756375	25HBC542A**30	CSPH*4812A**	58HDV080––20	42,000	12.2	14.5	42,000	3 86	8.4	26,600	2.62
3756376	25HBC542A**30	CSPH*4812A**	58HDV100––20	42,000	12.5	15.0	42,000	3 84	8.5	26,200	2.62
3646013	25HBC542A**30	CSPH*4812A**	58ME(B,C)040–12	42,000	12.5	14.5	42,000	3 84	8.4	26,400	2.64
3646019	25HBC542A**30	CSPH*4812A**	58ME(B,C)060–12	42,000	12.5	14.5	42,000	3 84	8.3	26,400	2.62
3646025	25HBC542A**30	CSPH*4812A**	58ME(B,C)080–12	42,000	12.5	15.0	42,000	3 84	8.4	26,200	2.64
3646031	25HBC542A**30	CSPH*4812A**	58ME(B,C)080–16	42,000	12.5	14.5	42,000	3 82	8.3	26,200	2.62
3646039	25HBC542A**30	CSPH*4812A**	58ME(B,C)100–20	42,000	12.5	15.0	42,000	3 86	8.4	26,000	2.66
3646047	25HBC542A**30	CSPH*4812A**	58ME(B,C)120–20	42,000	12.5	15.0	42,000	3 90	8.5	26,000	2.66
3646432	25HBC542A**30	CSPH*4812A**	58MEB040–12	42,000	12.5	14.5	42,000	3 84	8.4	26,400	2.64
3646053	25HBC542A**30	CSPH*4812A**	58MV(B,C)060–14	42,000	12.5	14.5	42,000	3 82	8.3	26,200	2.62
3646061	25HBC542A**30	CSPH*4812A**	58MV(B,C)080–14	41,500	12.0	14.5	42,000	3.76	8.2	26,200	2.58
3646069	25HBC542A**30	CSPH*4812A**	58MV(B,C)080–20	41,500	12.5	14.5	42,000	3.78	8.2	26,200	2.60
3646078	25HBC542A**30	CSPH*4812A**	58MV(B,C)100–20	41,500	12.0	14.5	42,000	3.76	8.3	26,000	2.58
3646086	25HBC542A**30	CSPH*4812A**	58MV(B,C)120–20	41,500	12.5	15.0	42,000	3 82	8.5	26,000	2.62
3646094	25HBC542A**30	CSPH*4812A**	58MVB040–14	41,500	12.0	14.5	42,000	3.74	8.2	26,200	2.58
3646100	25HBC542A**30	CSPH*4812A**	58PH*070–16	41,500	12.0	14.0	42,000	3.74	8.1	26,600	2.56
3646108	25HBC542A**30	CSPH*4812A**	58PH*090–16	42,000	12.5	15.0	42,000	3 84	8.5	26,000	2.64
3646117	25HBC542A**30	CSPH*4812A**	58PH*110–20	42,000	12.5	15.0	42,000	3 86	8.5	26,000	2.66
3646125	25HBC542A**30	CSPH*4812A**	58PH*135–20	42,000	12.5	15.0	42,000	3 84	8.4	26,000	2.64
3810569	25HBC542A**30	CSPH*4812A**	58VLR120–20	42,000	12.5	15.0	42,000	3 82	8.5	26,000	2.62
3810568	25HBC542A**30	CSPH*4812A**	58VMR120–20	41,500	12.5	15.0	42,000	3 80	8.5	26,000	2.62
4804815	25HBC542A**30	CSPH*4812A**	59*N*A060V17**14	41,000	11.8	14.2	42,000	3 68	8.2	26,200	2.54
4804816	25HBC542A**30	CSPH*4812A**	59*N*A080V17**14	41,500	12.0	14.5	42,000	3.72	8.2	26,000	2.56
4804817	25HBC542A**30	CSPH*4812A**	59*N*A100V21**20	41,500	12.0	14.5	42,000	3.74	8.5	26,000	2.58
4804818	25HBC542A**30	CSPH*4812A**	59*N*A120V24**22	41,500	12.5	15.0	42,000	3.78	8.5	25,800	2.60
4804819	25HBC542A**30	CSPH*4812A**	59*P5A060E17**14	41,500	12.0	14.5	42,000	3.74	8.2	26,400	2.56
4804820	25HBC542A**30	CSPH*4812A**	59*P5A080E17**16	42,000	12.0	14.5	42,000	3.78	8.2	26,400	2.58
4804821	25HBC542A**30	CSPH*4812A**	59*P5A100E21**16	41,500	12.0	14.5	42,000	3.76	8.2	26,200	2.58
4804822	25HBC542A**30	CSPH*4812A**	59*P5A120E24**22	42,000	12.5	15.0	42,000	3 86	8.5	26,200	2.64
4194310	25HBC542A**30	CSPH*4812A**	OVLAAB048112	42,000	12.0	14.5	42,000	3.78	8.5	26,600	2.58
4194311	25HBC542A**30	CSPH*4812A**	OVLAAB060154	42,000	12.5	15.0	42,000	3 92	8.7	26,800	2.66
4194309	25HBC542A**30	CSPH*4812A**	OVMAAB042112	42,000	12.0	14.5	42,000	3.76	8.2	26,200	2.58
3646141	25HBC542A**30	CSPH*4812A**+TDR		42,000	11.5	14.0	42,000	3.78	8.2	27,200	2.56
3810548	25HBC542A**30	FB4CNF042		42,000	12.0	13.5	42,000	3 80	8.5	26,400	2.62
3646142	25HBC542A**30	FB4CNF042+TXV		42,000	12.5	14.5	42,000	3 80	8.5	26,400	2.62
3810549	25HBC542A**30	FB4CNF048		42,000	12.5	13.5	42,000	3 82	8.5	26,400	2.62
3646143	25HBC542A**30	FB4CNF048+TXV		42,000	12.5	15.0	42,000	3 82	8.5	26,400	2.62
3646144	25HBC542A**30	FE4AN(B,F)003+UI		41,000	12.0	14.5	42,000	3 68	8.2	25,600	2.56
3646145	25HBC542A**30	FE4AN(B,F)005+UI		42,000	13.0	15.5	42,000	3 88	8.7	25,800	2.68
3646146	25HBC542A**30	FE4ANB006+UI		42,000	13.0	16.0	42,000	4 02	9.0	25,800	2.74
3646150	25HBC542A**30	FV4CN(B F)003		41,000	12.0	14.5	42,000	3 68	8.2	25,600	2.56
3646151	25HBC542A**30	FV4CN(B F)005		42,000	13.0	15.5	42,000	3 88	8.7	25,800	2.68
3646152	25HBC542A**30	FV4CNB006		42,000	13.0	16.0	42,000	4 02	9.0	25,800	2.74
3646156	25HBC542A**30	FX4DN(B,F)049		42,000	13.0	15.5	42,000	3 96	8.6	26,400	2.70
3810550	25HBC542A**30	FY5BNF042		42,000	12.0	13.0	42,000	3.76	8.5	26,600	2.58
3692775	25HBC542A**30	FY5BNF042+TXV		42,000	12.0	14.5	42,000	3.76	8.2	26,600	2.58
3810551	25HBC542A**30	FY5BNF048		42,000	12.0	13.5	42,000	3 82	8.5	26,800	2.62
3692776	25HBC542A**30	FY5BNF048+TXV		42,000	12.0	14.5	42,000	3 80	8.4	27,000	2.60
3646319	25HBC548A**30	†FX4DN(B,F)049		47,500	12.5	15.0	46,500	3 84	8.5	29,000	2.66
3646178	25HBC548A**30	CAP**4817A**	58CV(A,X)090–16	45,500	11.5	14.0	45,500	3 68	7.9	28,800	2.56
3646215	25HBC548A**30	CAP**4817A**	58ME(B,C)080–16	45,500	11.5	14.0	46,000	3.70	8.0	29,200	2.56
4804823	25HBC548A**30	CAP**4817A**	59*P5A080E17**16	45,000	11.4	13.7	46,000	3 60	8.0	29,200	2.52
3646292	25HBC548A**30	CAP**4817A**+TDR		45,000	11.5	13.5	46,000	3 66	7.9	29,200	2.54
3646184	25HBC548A**30	CAP**4821A**	58CV(A,X)110–20	45,000	11.5	14.0	45,000	3 66	7.9	28,600	2.56
4194312	25HBC548A**30	CAP**4821A**	58HDV080––20	45,500	11.5	13.5	46,000	3 66	8.0	29,200	2.54
3646221	25HBC548A**30	CAP**4821A**	58ME(B,C)100–20	45,500	12.0	14.0	45,000	3.70	8.0	28,600	2.58
3646239	25HBC548A**30	CAP**4821A**	58MV(B,C)080–20	44,500	11.5	14.0	45,000	3 60	7.8	28,600	2.52
3646247	25HBC548A**30	CAP**4821A**	58MV(B,C)100–20	45,000	11.5	13.5	45,500	3 64	7.8	29,000	2.54
3646266	25HBC548A**30	CAP**4821A**	58PH*090–16	45,500	12.0	14.0	45,500	3 68	7.9	28,800	2.56
3646274	25HBC548A**30	CAP**4821A**	58PH*110–20	45,000	12.0	14.5	45,000	3.70	8.0	28,400	2.58
3646324	25HBC548A**30	CAP**4821A**	58UVB080–20	44,500	11.5	14.0	45,000	3 60	7.8	28,600	2.52
3646325	25HBC548A**30	CAP**4821A**	58UVB100–20	45,000	11.5	13.5	45,500	3 64	7.8	29,000	2.54
3810574	25HBC548A**30	CAP**4821A**	58VLR120–20	45,000	12.0	14.0	45,000	3 66	8.0	28,600	2.56
3810573	25HBC548A**30	CAP**4821A**	58VMR120–20	45,000	11.5	14.0	45,500	3 64	8.0	28,800	2.54
4804824	25HBC548A**30	CAP**4821A**	59*N*A100V21**20	44,500	11.5	14.0	45,000	3 60	7.8	28,600	2.52
4804825	25HBC548A**30	CAP**4821A**	59*P5A080E17**16	45,000	11.2	13.5	45,500	3 56	7.8	29,000	2.50
4804826	25HBC548A**30	CAP**4821A**	59*P5A100E21**16	45,000	11.4	13.7	45,500	3 60	8.0	28,800	2.52
3646293	25HBC548A**30	CAP**4821A**+TDR		45,500	11.5	13.5	46,500	3 68	7.9	29,600	2.54
3646213	25HBC548A**30	CAP**4823A**	58HDV080––20	45,500	11.5	13.5	46,000	3 66	7.9	29,200	2.54

See notes on page 36

COMBINATION RATINGS CONTINUED

AHRI Ref. No.	Model Number	Coil Model Number	Furnace Model Number	Cooling Capacity	EER	SEER	High Temp		HSPF	Low Temp	
							E Capacity	E COP		H Capacity	H COP
4194318	25HBC548A**30	CAP**4823A**	58HDV100−−20	45,000	11.5	14.0	45,500	3 66	8.0	29,000	2.56
4804838	25HBC548A**30	CAP**4823A**	59*N*A100V21**20	44,500	11.5	14.0	45,000	3 60	7.8	28,600	2.52
4804839	25HBC548A**30	CAP**4823A**	59*N*A120V24**22	45,000	11.8	14.2	45,000	3 62	8.0	28,400	2.54
4804840	25HBC548A**30	CAP**4823A**	59*P5A100E21**16	45,000	11.4	13.7	45,500	3 60	8.0	28,800	2.52
4804841	25HBC548A**30	CAP**4823A**	59*P5A120E24**22	45,000	11.8	14.2	45,500	3 66	8.0	28,600	2.56
3646294	25HBC548A**30	CAP**4823A**+TDR		45,500	11.5	13.5	46,500	3 68	7.9	29,600	2.54
3646193	25HBC548A**30	CAP**4824A**	58CV(A,X)135−22	45,500	12.0	14.5	45,000	3.70	8.0	28,400	2.60
3646203	25HBC548A**30	CAP**4824A**	58CV(A,X)155−22	45,500	12.0	14.5	45,000	3.74	8.0	28,400	2.60
4194313	25HBC548A**30	CAP**4824A**	58HDV080−−20	45,500	11.5	14.0	46,000	3 68	8.0	29,200	2.56
4194314	25HBC548A**30	CAP**4824A**	58HDV100−−20	45,500	11.5	14.0	45,500	3 68	8.0	29,000	2.56
3646229	25HBC548A**30	CAP**4824A**	58ME(B,C)120−20	45,500	12.0	14.5	45,000	3.74	8.1	28,600	2.62
3646256	25HBC548A**30	CAP**4824A**	58MV(B,C)120−20	45,000	12.0	14.0	45,000	3 66	7.9	28,600	2.56
3646282	25HBC548A**30	CAP**4824A**	58PH*135−20	45,500	12.0	14.0	45,500	3.70	8.0	28,600	2.58
3646326	25HBC548A**30	CAP**4824A**	58UVB120−20	45,000	12.0	14.0	45,000	3 66	7.9	28,600	2.56
4804827	25HBC548A**30	CAP**4824A**	59*N*A100V21**20	45,000	11.5	14.0	45,000	3 60	8.0	28,600	2.52
4804828	25HBC548A**30	CAP**4824A**	59*N*A120V24**22	45,000	11.8	14.2	45,000	3 64	8.0	28,200	2.56
4804829	25HBC548A**30	CAP**4824A**	59*P5A100E21**16	45,000	11.4	13.7	45,500	3 62	8.0	28,800	2.52
4804830	25HBC548A**30	CAP**4824A**	59*P5A120E24**22	45,500	11.8	14.2	45,500	3 68	8.0	28,600	2.56
3646295	25HBC548A**30	CAP**4824A**+TDR		45,500	11.5	13.5	46,500	3 68	7.9	29,600	2.54
3646185	25HBC548A**30	CAP**6021A**	58CV(A,X)110−20	46,000	12.0	14.5	45,500	3.72	8.0	28,800	2.60
4194315	25HBC548A**30	CAP**6021A**	58HDV080−−20	46,500	11.5	14.0	46,000	3.72	8.0	29,400	2.58
3646222	25HBC548A**30	CAP**6021A**	58ME(B,C)100−20	46,500	12.0	14.5	45,500	3.78	8.1	28,800	2.62
3646240	25HBC548A**30	CAP**6021A**	58MV(B,C)080−20	45,500	12.0	14.0	45,500	3 66	7.9	28,800	2.56
3646248	25HBC548A**30	CAP**6021A**	58MV(B,C)100−20	46,000	12.0	14.0	45,500	3.70	8.0	29,000	2.58
3646267	25HBC548A**30	CAP**6021A**	58PH*090−16	46,500	12.0	14.5	45,500	3.74	8.1	28,800	2.62
3646275	25HBC548A**30	CAP**6021A**	58PH*110−20	46,500	12.5	14.5	45,000	3.78	8.1	28,600	2.64
3646327	25HBC548A**30	CAP**6021A**	58UVB080−20	45,500	12.0	14.0	45,500	3 66	7.9	28,800	2.56
3646328	25HBC548A**30	CAP**6021A**	58UVB100−20	46,000	12.0	14.0	45,500	3.70	8.0	29,000	2.58
3810576	25HBC548A**30	CAP**6021A**	58VLR120−20	46,000	12.0	14.5	45,500	3.72	8.0	28,600	2.60
3810575	25HBC548A**30	CAP**6021A**	58VMR120−20	46,000	12.0	14.0	45,500	3.70	8.0	28,800	2.58
4804831	25HBC548A**30	CAP**6021A**	59*N*A100V21**20	45,500	11.8	14.2	45,500	3 66	8.0	28,800	2.56
4804832	25HBC548A**30	CAP**6021A**	59*P5A080E17**16	46,000	11.4	13.7	46,000	3 62	8.0	29,200	2.54
4804833	25HBC548A**30	CAP**6021A**	59*P5A100E21**16	46,000	11.8	14.2	45,500	3 66	8.0	29,000	2.56
3646296	25HBC548A**30	CAP**6021A**+TDR		46,500	11.5	13.5	46,500	3.74	8.1	29,800	2.58
3646194	25HBC548A**30	CAP**6024A**	58CV(A,X)135−22	46,000	12.0	14.5	45,000	3.76	8.1	28,600	2.62
3646204	25HBC548A**30	CAP**6024A**	58CV(A,X)155−22	46,500	12.5	15.0	45,000	3.78	8.1	28,400	2.64
4194316	25HBC548A**30	CAP**6024A**	58HDV080−−20	46,500	12.0	14.0	46,000	3.74	8.2	29,400	2.58
4194317	25HBC548A**30	CAP**6024A**	58HDV100−−20	46,500	12.0	14.0	45,500	3.74	8.2	29,000	2.60
3646230	25HBC548A**30	CAP**6024A**	58ME(B,C)120−20	46,500	12.0	14.5	45,500	3 80	8.2	28,800	2.64
3646257	25HBC548A**30	CAP**6024A**	58MV(B,C)120−20	46,000	12.0	14.5	45,500	3.72	8.0	28,800	2.60
3646283	25HBC548A**30	CAP**6024A**	58PH*135−20	46,500	12.0	14.5	45,500	3.76	8.1	28,800	2.62
3646329	25HBC548A**30	CAP**6024A**	58UVB120−20	46,000	12.0	14.5	45,500	3.72	8.0	28,800	2.60
4804834	25HBC548A**30	CAP**6024A**	59*N*A100V21**20	45,500	11.8	14.2	45,500	3 66	8.0	28,600	2.56
4804835	25HBC548A**30	CAP**6024A**	59*N*A120V24**22	46,000	12.0	14.5	45,000	3 68	8.0	28,400	2.58
4804836	25HBC548A**30	CAP**6024A**	59*P5A100E21**16	46,000	11.8	14.2	45,500	3 68	8.0	29,000	2.56
4804837	25HBC548A**30	CAP**6024A**	59*P5A120E24**22	46,500	12.0	14.5	45,500	3.74	8.2	28,800	2.60
3646297	25HBC548A**30	CAP**6024A**+TDR		46,500	11.5	13.5	46,500	3.74	8.1	29,800	2.56
4194319	25HBC548A**30	CAP**6025A**	58HDV080−−20	46,500	11.5	14.0	46,000	3.74	8.2	29,400	2.58
3646214	25HBC548A**30	CAP**6025A**	58HDV100−−20	46,500	12.0	14.0	45,500	3.74	8.1	29,000	2.60
4804842	25HBC548A**30	CAP**6025A**	59*N*A100V21**20	45,500	11.8	14.2	45,500	3 66	8.0	28,800	2.56
4804843	25HBC548A**30	CAP**6025A**	59*N*A120V24**22	46,000	12.0	14.5	45,000	3 68	8.0	28,400	2.58
4804844	25HBC548A**30	CAP**6025A**	59*P5A100E21**16	46,000	11.8	14.2	45,500	3 68	8.0	29,000	2.56
4804845	25HBC548A**30	CAP**6025A**	59*P5A120E24**22	46,500	12.0	14.5	45,500	3.74	8.2	28,800	2.60
3646298	25HBC548A**30	CAP**6025A**+TDR		46,500	11.5	13.5	46,500	3.74	8.1	29,800	2.56
3646179	25HBC548A**30	CNPH*4821A**	58CV(A,X)090−16	45,000	12.0	14.0	45,000	3 66	7.9	28,600	2.56
3646186	25HBC548A**30	CNPH*4821A**	58CV(A,X)110−20	45,500	12.0	14.0	45,000	3 68	7.9	28,600	2.58
3646195	25HBC548A**30	CNPH*4821A**	58CV(A,X)135−22	45,500	12.0	14.5	45,000	3.72	8.0	28,400	2.60
3646205	25HBC548A**30	CNPH*4821A**	58CV(A,X)155−22	45,500	12.0	14.5	45,000	3.74	8.0	28,400	2.62
3756380	25HBC548A**30	CNPH*4821A**	58HDV080−−20	45,500	11.5	13.5	46,000	3 68	8.0	29,200	2.56
3756381	25HBC548A**30	CNPH*4821A**	58HDV100−−20	45,500	12.0	14.0	45,500	3 68	8.0	29,000	2.56
3646216	25HBC548A**30	CNPH*4821A**	58ME(B,C)080−16	45,500	11.5	14.0	45,500	3 68	7.9	29,000	2.56
3646223	25HBC548A**30	CNPH*4821A**	58ME(B,C)100−20	45,500	12.0	14.5	45,000	3.72	8.0	28,600	2.60
3646231	25HBC548A**30	CNPH*4821A**	58ME(B,C)120−20	46,000	12.0	14.5	45,000	3.76	8.1	28,600	2.62
3646241	25HBC548A**30	CNPH*4821A**	58MV(B,C)080−20	45,000	11.5	14.0	45,000	3 62	7.8	28,600	2.54
3646249	25HBC548A**30	CNPH*4821A**	58MV(B,C)100−20	45,500	11.5	13.5	45,500	3 66	7.8	28,800	2.54
3646258	25HBC548A**30	CNPH*4821A**	58MV(B,C)120−20	45,500	12.0	14.0	45,000	3 68	7.9	28,600	2.56
3646268	25HBC548A**30	CNPH*4821A**	58PH*090−16	45,500	12.0	14.0	45,500	3.70	7.9	28,800	2.58
3646276	25HBC548A**30	CNPH*4821A**	58PH*110−20	45,500	12.0	14.5	45,000	3.74	8.0	28,400	2.60
3646284	25HBC548A**30	CNPH*4821A**	58PH*135−20	45,500	12.0	14.0	45,000	3.72	8.0	28,600	2.60
3810580	25HBC548A**30	CNPH*4821A**	58VLR120−20	45,500	12.0	14.5	45,000	3 68	8.0	28,400	2.58
3810579	25HBC548A**30	CNPH*4821A**	58VMR120−20	45,000	12.0	14.0	45,000	3 66	8.0	28,600	2.56
4804861	25HBC548A**30	CNPH*4821A**	59*N*A100V21**20	45,000	11.5	14.0	45,000	3 62	8.0	28,600	2.54
4804862	25HBC548A**30	CNPH*4821A**	59*N*A120V24**22	45,000	11.8	14.2	45,000	3 64	8.0	28,400	2.56
4804863	25HBC548A**30	CNPH*4821A**	59*P5A080E17**16	45,000	11.4	13.7	45,500	3 58	8.0	29,000	2.50
4804864	25HBC548A**30	CNPH*4821A**	59*P5A100E21**16	45,000	11.5	14.0	45,500	3 62	8.0	28,800	2.54
4804865	25HBC548A**30	CNPH*4821A**	59*P5A120E24**22	45,500	11.8	14.2	45,500	3.70	8.0	28,800	2.58
4194328	25HBC548A**30	CNPH*4821A**	OVLAAB060154	46,000	11.5	14.0	46,500	3.76	8.2	29,600	2.58
3646300	25HBC548A**30	CNPH*4821A**+TDR		45,500	11.5	13.5	46,500	3 68	7.9	29,600	2.54
3646180	25HBC548A**30	CNPH*6024A**	58CV(A,X)090−16	46,000	12.0	14.5	45,000	3.70	8.0	28,600	2.60
3646187	25HBC548A**30	CNPH*6024A**	58CV(A,X)110−20	46,000	12.0	14.5	45,000	3.72	8.0	28,600	2.62

See notes on page 36

COMBINATION RATINGS CONTINUED

AHRI Ref. No.	Model Number	Coil Model Number	Furnace Model Number	Cooling Capacity	EER	SEER	High Temp		HSPF	Low Temp	
							E Capacity	E COP		H Capacity	H COP
3646196	25HBC548A**30	CNPH*6024A**	58CV(A,X)135–22	46,000	12.5	14.5	45,000	3.76	8.1	28,600	2.64
3646206	25HBC548A**30	CNPH*6024A**	58CV(A,X)155–22	46,500	12.5	15.0	45,000	3.78	8.1	28,400	2.66
3756382	25HBC548A**30	CNPH*6024A**	58HDV080––20	46,500	12.0	14.0	45,500	3.74	8.1	29,400	2.60
3756383	25HBC548A**30	CNPH*6024A**	58HDV100––20	46,500	12.0	14.0	45,500	3.74	8.1	29,000	2.60
3646217	25HBC548A**30	CNPH*6024A**	58ME(B,C)080–16	46,500	12.0	14.0	46,000	3.72	8.0	29,200	2.60
3646224	25HBC548A**30	CNPH*6024A**	58ME(B,C)100–20	46,500	12.0	14.5	45,500	3.78	8.1	28,800	2.64
3646232	25HBC548A**30	CNPH*6024A**	58ME(B,C)120–20	46,500	12.0	14.5	45,500	3 80	8.2	28,800	2.66
3646242	25HBC548A**30	CNPH*6024A**	58MV(B,C)080–20	45,500	12.0	14.0	45,000	3 66	7.9	28,600	2.58
3646250	25HBC548A**30	CNPH*6024A**	58MV(B,C)100–20	46,000	12.0	14.0	45,500	3.70	8.0	29,000	2.58
3646259	25HBC548A**30	CNPH*6024A**	58MV(B,C)120–20	46,000	12.0	14.5	45,500	3.72	8.0	28,800	2.60
3646269	25HBC548A**30	CNPH*6024A**	58PH*090–16	46,500	12.0	14.5	45,500	3.76	8.1	29,000	2.62
3646277	25HBC548A**30	CNPH*6024A**	58PH*110–20	46,500	12.5	15.0	45,000	3.78	8.1	28,600	2.64
3646285	25HBC548A**30	CNPH*6024A**	58PH*135–20	46,500	12.0	14.5	45,500	3.78	8.1	28,800	2.64
3810582	25HBC548A**30	CNPH*6024A**	58VLR120–20	46,000	12.0	14.5	45,000	3.74	8.0	28,600	2.62
3810581	25HBC548A**30	CNPH*6024A**	58VMR120–20	46,000	12.0	14.5	45,500	3.70	8.0	28,800	2.60
4804866	25HBC548A**30	CNPH*6024A**	59*N*A100V21**20	45,500	11.8	14.2	45,000	3 66	8.0	28,600	2.56
4804867	25HBC548A**30	CNPH*6024A**	59*N*A120V24**22	46,000	12.0	14.5	45,000	3 68	8.2	28,400	2.60
4804868	25HBC548A**30	CNPH*6024A**	59*P5A080E17**16	46,000	11.5	14.0	46,000	3 64	8.0	29,200	2.54
4804869	25HBC548A**30	CNPH*6024A**	59*P5A100E21**16	46,000	11.8	14.2	45,500	3 68	8.0	29,000	2.56
4804870	25HBC548A**30	CNPH*6024A**	59*P5A120E24**22	46,500	12.0	14.5	45,500	3.74	8.2	28,800	2.60
4194329	25HBC548A**30	CNPH*6024A**	OVLAAB060154	47,000	12.0	14.0	46,500	3 80	8.2	29,600	2.62
3646301	25HBC548A**30	CNPH*6024A**+TDR		46,500	11.5	13.5	46,500	3.72	8.1	29,800	2.56
3646181	25HBC548A**30	CNPH*6124A**	58CV(A,X)090–16	46,000	12.0	14.5	45,500	3.74	8.1	28,800	2.60
3646188	25HBC548A**30	CNPH*6124A**	58CV(A,X)110–20	46,500	12.0	14.5	45,500	3.76	8.1	28,800	2.62
3646197	25HBC548A**30	CNPH*6124A**	58CV(A,X)135–22	46,500	12.5	14.5	45,500	3 80	8.2	28,600	2.64
3646207	25HBC548A**30	CNPH*6124A**	58CV(A,X)155–22	46,500	12.5	15.0	45,500	3 84	8.2	28,600	2.66
3756384	25HBC548A**30	CNPH*6124A**	58HDV080––20	46,500	12.0	14.0	46,500	3 80	8.2	29,400	2.60
3756385	25HBC548A**30	CNPH*6124A**	58HDV100––20	46,500	12.2	14.5	46,000	3.78	8.2	29,200	2.60
3646218	25HBC548A**30	CNPH*6124A**	58ME(B,C)080–16	46,500	12.0	14.0	46,000	3 80	8.1	29,200	2.60
3646225	25HBC548A**30	CNPH*6124A**	58ME(B,C)100–20	46,500	12.0	14.5	45,500	3 82	8.2	28,800	2.64
3646233	25HBC548A**30	CNPH*6124A**	58ME(B,C)120–20	47,000	12.5	15.0	45,500	3 86	8.3	28,800	2.66
3646243	25HBC548A**30	CNPH*6124A**	58MV(B,C)080–20	46,000	12.0	14.0	45,500	3.70	8.0	28,800	2.58
3646251	25HBC548A**30	CNPH*6124A**	58MV(B,C)100–20	46,500	12.0	14.0	46,000	3.76	8.1	29,200	2.58
3646260	25HBC548A**30	CNPH*6124A**	58MV(B,C)120–20	46,500	12.0	14.5	45,500	3.76	8.1	28,800	2.60
3646270	25HBC548A**30	CNPH*6124A**	58PH*090–16	46,500	12.0	14.5	46,000	3 80	8.2	29,000	2.62
3646278	25HBC548A**30	CNPH*6124A**	58PH*110–20	46,500	12.5	14.5	45,500	3 82	8.2	28,600	2.64
3646286	25HBC548A**30	CNPH*6124A**	58PH*135–20	46,500	12.0	14.5	45,500	3 82	8.2	28,800	2.64
3810584	25HBC548A**30	CNPH*6124A**	58VLR120–20	46,500	12.0	14.5	45,500	3.78	8.2	28,800	2.62
3810583	25HBC548A**30	CNPH*6124A**	58VMR120–20	46,000	12.0	14.5	45,500	3.74	8.2	28,800	2.60
4804871	25HBC548A**30	CNPH*6124A**	59*N*A100V21**20	46,000	11.8	14.2	45,500	3 68	8.0	28,800	2.58
4804872	25HBC548A**30	CNPH*6124A**	59*N*A120V24**22	46,000	12.0	14.5	45,000	3.72	8.2	28,600	2.60
4804873	25HBC548A**30	CNPH*6124A**	59*P5A080E17**16	46,000	11.5	14.0	46,000	3 68	8.0	29,200	2.54
4804874	25HBC548A**30	CNPH*6124A**	59*P5A100E21**16	46,000	11.8	14.2	46,000	3.72	8.2	29,000	2.58
4804875	25HBC548A**30	CNPH*6124A**	59*P5A120E24**22	46,500	12.0	14.5	46,000	3 80	8.2	29,000	2.62
4194330	25HBC548A**30	CNPH*6124A**	OVLAAB060154	47,500	12.0	14.0	47,000	3 90	8.5	29,800	2.62
3646302	25HBC548A**30	CNPH*6124A**+TDR		47,000	11.5	14.0	47,000	3 82	8.2	29,800	2.58
3646189	25HBC548A**30	CNPV*4821A**	58CV(A,X)110–20	45,500	12.0	14.0	45,000	3 68	7.9	28,600	2.58
4194320	25HBC548A**30	CNPV*4821A**	58HDV080––20	45,500	11.5	14.0	46,000	3 68	8.0	29,200	2.56
3646226	25HBC548A**30	CNPV*4821A**	58ME(B,C)100–20	45,500	12.0	14.5	45,000	3.72	8.0	28,600	2.60
3646244	25HBC548A**30	CNPV*4821A**	58MV(B,C)080–20	45,000	11.5	14.0	45,000	3 62	7.8	28,600	2.54
3646252	25HBC548A**30	CNPV*4821A**	58MV(B,C)100–20	45,500	11.5	13.5	45,500	3 66	7.8	28,800	2.54
3646271	25HBC548A**30	CNPV*4821A**	58PH*090–16	45,500	12.0	14.0	45,500	3.70	7.9	28,800	2.58
3646279	25HBC548A**30	CNPV*4821A**	58PH*110–20	45,500	12.0	14.5	45,000	3.74	8.0	28,400	2.60
3646330	25HBC548A**30	CNPV*4821A**	58UVB080–20	45,000	11.5	14.0	45,000	3 62	7.8	28,600	2.54
3646331	25HBC548A**30	CNPV*4821A**	58UVB100–20	45,500	11.5	13.5	45,500	3 66	7.8	28,800	2.54
3810578	25HBC548A**30	CNPV*4821A**	58VLR120–20	45,500	12.0	14.5	45,000	3 68	8.0	28,400	2.58
3810577	25HBC548A**30	CNPV*4821A**	58VMR120–20	45,000	12.0	14.0	45,000	3 66	8.0	28,600	2.56
4804846	25HBC548A**30	CNPV*4821A**	59*N*A100V21**20	45,000	11.5	14.0	45,000	3 62	8.0	28,600	2.54
4804847	25HBC548A**30	CNPV*4821A**	59*P5A080E17**16	45,000	11.4	13.7	45,500	3 58	7.8	29,000	2.50
4804848	25HBC548A**30	CNPV*4821A**	59*P5A100E21**16	45,000	11.5	14.0	45,500	3 62	8.0	28,800	2.54
3646303	25HBC548A**30	CNPV*4821A**+TDR		45,500	11.5	13.5	46,500	3 68	7.9	29,600	2.54
3646198	25HBC548A**30	CNPV*4824A**	58CV(A,X)135–22	45,500	12.0	14.5	45,000	3.72	8.0	28,400	2.60
3646208	25HBC548A**30	CNPV*4824A**	58CV(A,X)155–22	45,500	12.0	14.5	45,000	3.74	8.0	28,400	2.62
4194321	25HBC548A**30	CNPV*4824A**	58HDV080––20	45,500	11.5	14.0	46,000	3 68	8.0	29,200	2.56
4149637	25HBC548A**30	CNPV*4824A**	58HDV100––20	45,500	12.0	14.0	45,500	3 68	8.0	29,000	2.56
3756377	25HBC548A**30	CNPV*4824A**	58HDV100––20 (DWNFLW ONLY)	45,500	12.0	14.0	45,500	3 68	8.0	29,000	2.56
3646234	25HBC548A**30	CNPV*4824A**	58ME(B,C)120–20	46,000	12.0	14.5	45,000	3.76	8.1	28,600	2.62
3646261	25HBC548A**30	CNPV*4824A**	58MV(B,C)120–20	45,500	12.0	14.0	45,000	3 68	7.9	28,600	2.56
3646287	25HBC548A**30	CNPV*4824A**	58PH*135–20	45,500	12.0	14.0	45,000	3.72	8.0	28,600	2.60
3646332	25HBC548A**30	CNPV*4824A**	58UVB120–20	45,500	12.0	14.0	45,000	3 68	7.9	28,600	2.56
4804849	25HBC548A**30	CNPV*4824A**	59*N*A100V21**20	45,000	11.5	14.0	45,000	3 62	8.0	28,600	2.54
4804850	25HBC548A**30	CNPV*4824A**	59*N*A120V24**22	45,000	11.8	14.2	45,000	3 64	8.0	28,400	2.56
4804851	25HBC548A**30	CNPV*4824A**	59*P5A100E21**16	45,000	11.5	14.0	45,500	3 62	8.0	28,800	2.54
4804852	25HBC548A**30	CNPV*4824A**	59*P5A120E24**22	45,500	11.8	14.2	45,500	3.70	8.0	28,800	2.58
4194324	25HBC548A**30	CNPV*4824A**	OVLAAB060154	46,000	11.5	14.0	46,500	3.76	8.2	29,600	2.58
3646304	25HBC548A**30	CNPV*4824A**+TDR		45,500	11.5	13.5	46,500	3 68	7.9	29,600	2.54
3646199	25HBC548A**30	CNPV*6024A**	58CV(A,X)135–22	46,000	12.5	14.5	45,000	3.76	8.1	28,600	2.64
3646209	25HBC548A**30	CNPV*6024A**	58CV(A,X)155–22	46,500	12.5	15.0	45,000	3.78	8.1	28,400	2.66
4194322	25HBC548A**30	CNPV*6024A**	58HDV080––20	46,500	12.0	14.0	46,000	3.74	8.2	29,400	2.60

See notes on page 36

COMBINATION RATINGS CONTINUED

AHRI Ref. No.	Model Number	Coil Model Number	Furnace Model Number	Cooling Capacity	EER	SEER	High Temp		HSPF	Low Temp	
							E Capacity	E COP		H Capacity	H COP
4149631	25HBC548A**30	CNPV*6024A**	58HDV100– –20	46,500	12.0	14.0	45,500	3.74	8.1	29,000	2.60
3756378	25HBC548A**30	CNPV*6024A**	58HDV100– –20 (DWNFLW ONLY)	46,500	12.0	14.0	45,500	3.74	8.1	29,000	2.60
3646235	25HBC548A**30	CNPV*6024A**	58ME(B,C)120–20	46,500	12.0	14.5	45,500	3 80	8.2	28,800	2.66
3646262	25HBC548A**30	CNPV*6024A**	58MV(B,C)120–20	46,000	12.0	14.5	45,500	3.72	8.0	28,800	2.60
3646288	25HBC548A**30	CNPV*6024A**	58PH*135–20	46,500	12.0	14.5	45,500	3.78	8.1	28,800	2.64
3646333	25HBC548A**30	CNPV*6024A**	58UVB120–20	46,000	12.0	14.5	45,500	3.72	8.0	28,800	2.60
4804853	25HBC548A**30	CNPV*6024A**	59*N*A100V21**20	45,500	11.8	14.2	45,000	3 66	8.0	28,600	2.56
4804854	25HBC548A**30	CNPV*6024A**	59*N*A120V24**22	46,000	12.0	14.5	45,000	3 68	8.2	28,400	2.60
4804855	25HBC548A**30	CNPV*6024A**	59*P5A100E21**16	46,000	11.8	14.2	45,500	3 68	8.2	29,000	2.56
4804856	25HBC548A**30	CNPV*6024A**	59*P5A120E24**22	46,500	12.0	14.5	45,500	3.74	8.2	28,800	2.60
4194325	25HBC548A**30	CNPV*6024A**	OVLAAB060154	47,000	12.0	14.0	46,500	3 80	8.2	29,600	2.62
3646305	25HBC548A**30	CNPV*6024A**+TDR		46,500	11.5	13.5	46,500	3.72	8.0	29,800	2.56
3646190	25HBC548A**30	CNPV*6124A**	58CV(A,X)110–20	46,500	12.2	14.5	45,500	3 82	8.2	28,800	2.64
3646200	25HBC548A**30	CNPV*6124A**	58CV(A,X)135–22	47,000	12.5	15.0	45,500	3 84	8.3	28,600	2.66
3646210	25HBC548A**30	CNPV*6124A**	58CV(A,X)155–22	47,000	12.5	15.0	45,500	3 88	8.5	28,600	2.68
4194323	25HBC548A**30	CNPV*6124A**	58HDV080– –20	47,000	12.0	14.5	46,500	3 82	8.2	29,400	2.62
4149632	25HBC548A**30	CNPV*6124A**	58HDV100– –20	47,000	12.2	14.5	46,000	3 82	8.2	29,200	2.64
3756379	25HBC548A**30	CNPV*6124A**	58HDV100– –20 (DWNFLW ONLY)	47,000	12.2	14.5	46,000	3 82	8.2	29,200	2.64
3646236	25HBC548A**30	CNPV*6124A**	58ME(B,C)120–20	47,000	12.5	15.0	45,500	3 90	8.5	28,800	2.68
3646253	25HBC548A**30	CNPV*6124A**	58MV(B,C)100–20	46,500	12.0	14.5	46,000	3.78	8.3	29,200	2.62
3646263	25HBC548A**30	CNPV*6124A**	58MV(B,C)120–20	46,500	12.0	14.5	45,500	3 80	8.3	28,800	2.64
3646289	25HBC548A**30	CNPV*6124A**	58PH*135–20	47,000	12.5	15.0	45,500	3 86	8.5	29,000	2.66
3646334	25HBC548A**30	CNPV*6124A**	58UVB100–20	46,500	12.0	14.5	46,000	3.78	8.3	29,200	2.62
3646335	25HBC548A**30	CNPV*6124A**	58UVB120–20	46,500	12.0	14.5	45,500	3 80	8.3	28,800	2.64
4804857	25HBC548A**30	CNPV*6124A**	59*N*A100V21**20	46,500	12.0	14.5	45,500	3.74	8.2	28,800	2.60
4804858	25HBC548A**30	CNPV*6124A**	59*N*A120V24**22	46,500	12.5	15.0	45,000	3.78	8.5	28,400	2.62
4804859	25HBC548A**30	CNPV*6124A**	59*P5A100E21**16	46,500	12.0	14.5	46,000	3.76	8.2	29,200	2.60
4804860	25HBC548A**30	CNPV*6124A**	59*P5A120E24**22	47,000	12.0	14.5	46,000	3 84	8.2	29,000	2.64
4194326	25HBC548A**30	CNPV*6124A**	OVLAAB048112	46,500	11.5	14.0	46,500	3.74	8.2	29,600	2.58
4194327	25HBC548A**30	CNPV*6124A**	OVLAAB060154	48,000	12.0	14.5	47,000	3 92	8.5	29,800	2.66
3646306	25HBC548A**30	CNPV*6124A**+TDR		47,000	11.5	14.0	47,000	3 80	8.2	30,000	2.60
3646182	25HBC548A**30	CSPH*4812A**	58CV(A,X)090–16	45,500	12.0	14.0	45,500	3 68	7.9	28,800	2.56
3646191	25HBC548A**30	CSPH*4812A**	58CV(A,X)110–20	45,500	12.0	14.0	45,500	3.70	7.9	28,800	2.58
3646201	25HBC548A**30	CSPH*4812A**	58CV(A,X)135–22	46,000	12.0	14.5	45,000	3.72	8.0	28,600	2.60
3646211	25HBC548A**30	CSPH*4812A**	58CV(A,X)155–22	46,000	12.0	14.5	45,000	3.76	8.0	28,600	2.62
3756386	25HBC548A**30	CSPH*4812A**	58HDV080– –20	45,500	11.5	13.5	46,000	3.70	8.0	29,200	2.56
3756387	25HBC548A**30	CSPH*4812A**	58HDV100– –20	45,500	12.0	14.0	45,500	3.70	8.0	29,000	2.56
3646219	25HBC548A**30	CSPH*4812A**	58ME(B,C)080–16	46,000	11.5	14.0	46,000	3.70	7.9	29,200	2.56
3646227	25HBC548A**30	CSPH*4812A**	58ME(B,C)100–20	46,000	12.0	14.5	45,500	3.74	8.0	28,600	2.60
3646237	25HBC548A**30	CSPH*4812A**	58ME(B,C)120–20	46,000	12.0	14.5	45,500	3.76	8.1	28,600	2.62
3646245	25HBC548A**30	CSPH*4812A**	58MV(B,C)080–20	45,500	11.5	14.0	45,500	3 64	7.8	28,800	2.54
3646254	25HBC548A**30	CSPH*4812A**	58MV(B,C)100–20	45,500	11.5	13.5	45,500	3 68	7.9	29,000	2.56
3646264	25HBC548A**30	CSPH*4812A**	58MV(B,C)120–20	45,500	12.0	14.0	45,500	3.70	7.9	28,800	2.58
3646272	25HBC548A**30	CSPH*4812A**	58PH*090–16	46,000	12.0	14.0	45,500	3.72	8.0	28,800	2.58
3646280	25HBC548A**30	CSPH*4812A**	58PH*110–20	46,000	12.0	14.5	45,000	3.74	8.0	28,600	2.60
3646290	25HBC548A**30	CSPH*4812A**	58PH*135–20	45,500	12.0	14.0	45,500	3.72	8.0	28,600	2.60
3810586	25HBC548A**30	CSPH*4812A**	58VLR120–20	45,500	12.0	14.5	45,500	3.70	8.0	28,600	2.58
3810585	25HBC548A**30	CSPH*4812A**	58VMR120–20	45,500	12.0	14.0	45,500	3 68	8.0	28,800	2.56
4804876	25HBC548A**30	CSPH*4812A**	59*N*A100V21**20	45,500	11.5	14.0	45,500	3 64	8.0	28,800	2.54
4804877	25HBC548A**30	CSPH*4812A**	59*N*A120V24**22	45,500	11.8	14.2	45,000	3 66	8.0	28,400	2.56
4804878	25HBC548A**30	CSPH*4812A**	59*P5A080E17**16	45,500	11.4	13.7	46,000	3 60	8.0	29,200	2.52
4804879	25HBC548A**30	CSPH*4812A**	59*P5A100E21**16	45,500	11.5	14.0	45,500	3 64	8.0	29,000	2.54
4804880	25HBC548A**30	CSPH*4812A**	59*P5A120E24**22	46,000	11.8	14.2	45,500	3.70	8.0	28,800	2.58
4194331	25HBC548A**30	CSPH*4812A**	OVLAAB060154	46,500	11.5	14.0	46,500	3.78	8.2	29,800	2.58
3646307	25HBC548A**30	CSPH*4812A**+TDR		45,500	11.5	13.5	46,500	3.72	7.9	29,800	2.56
3646183	25HBC548A**30	CSPH*6012A**	58CV(A,X)090–16	46,500	12.0	14.5	45,500	3.74	8.0	28,800	2.60
3646192	25HBC548A**30	CSPH*6012A**	58CV(A,X)110–20	46,500	12.0	14.5	45,500	3.76	8.0	28,800	2.62
3646202	25HBC548A**30	CSPH*6012A**	58CV(A,X)135–22	46,500	12.5	14.5	45,000	3 80	8.1	28,600	2.64
3646212	25HBC548A**30	CSPH*6012A**	58CV(A,X)155–22	46,500	12.5	15.0	45,000	3 82	8.2	28,600	2.66
3756388	25HBC548A**30	CSPH*6012A**	58HDV080– –20	46,500	12.0	14.0	45,500	3.78	8.1	29,400	2.60
3756389	25HBC548A**30	CSPH*6012A**	58HDV100– –20	46,500	12.0	14.0	45,500	3.78	8.1	29,200	2.62
3646220	25HBC548A**30	CSPH*6012A**	58ME(B,C)080–16	46,500	12.0	14.0	46,000	3.76	8.1	29,200	2.60
3646228	25HBC548A**30	CSPH*6012A**	58ME(B,C)100–20	47,000	12.0	14.5	45,500	3 82	8.2	28,800	2.64
3646238	25HBC548A**30	CSPH*6012A**	58ME(B,C)120–20	47,000	12.5	15.0	45,500	3 84	8.2	28,800	2.66
3646246	25HBC548A**30	CSPH*6012A**	58MV(B,C)080–20	46,000	12.0	14.5	45,500	3.70	7.9	28,800	2.58
3646255	25HBC548A**30	CSPH*6012A**	58MV(B,C)100–20	46,500	12.0	14.0	45,500	3.74	8.0	29,000	2.60
3646265	25HBC548A**30	CSPH*6012A**	58MV(B,C)120–20	46,500	12.0	14.5	45,500	3.76	8.0	28,800	2.62
3646273	25HBC548A**30	CSPH*6012A**	58PH*090–16	46,500	12.0	14.5	45,500	3 80	8.1	29,000	2.62
3646281	25HBC548A**30	CSPH*6012A**	58PH*110–20	46,500	12.5	15.0	45,500	3 82	8.1	28,600	2.66
3646291	25HBC548A**30	CSPH*6012A**	58PH*135–20	46,500	12.0	14.5	45,500	3 82	8.1	28,800	2.64
3810588	25HBC548A**30	CSPH*6012A**	58VLR120–20	46,500	12.0	14.5	45,500	3.76	8.2	28,600	2.62
3810587	25HBC548A**30	CSPH*6012A**	58VMR120–20	46,500	12.0	14.5	45,500	3.74	8.2	28,800	2.60
4804881	25HBC548A**30	CSPH*6012A**	59*N*A100V21**20	46,000	12.0	14.5	45,500	3 68	8.0	28,800	2.58
4804882	25HBC548A**30	CSPH*6012A**	59*N*A120V24**22	46,000	12.0	14.5	45,000	3.72	8.2	28,400	2.60
4804883	25HBC548A**30	CSPH*6012A**	59*P5A080E17**16	46,000	11.5	14.0	46,000	3 66	8.0	29,200	2.54
4804884	25HBC548A**30	CSPH*6012A**	59*P5A100E21**16	46,500	11.8	14.2	46,000	3.72	8.2	29,000	2.58
4804885	25HBC548A**30	CSPH*6012A**	59*P5A120E24**22	46,500	12.0	14.5	45,500	3 80	8.2	29,000	2.62
4194332	25HBC548A**30	CSPH*6012A**	OVLAAB048112	46,500	11.5	14.0	46,000	3.70	8.0	29,400	2.56

See notes on page 36

COMBINATION RATINGS CONTINUED

AHRI Ref. No.	Model Number	Coil Model Number	Furnace Model Number	Cooling Capacity	EER	SEER	High Temp		HSPF	Low Temp	
							E Capacity	E COP		H Capacity	H COP
4194333	25HBC548A**30	CSPH*6012A**	OVLAAB060154	47,500	12.0	14.5	46,500	3 86	8.5	29,600	2.64
3646308	25HBC548A**30	CSPH*6012A**+TDR		46,500	11.5	13.5	46,500	3.76	8.1	29,800	2.58
3810570	25HBC548A**30	FB4CNF048		46,000	11.5	13.0	45,500	3 68	8.0	29,200	2.56
3646309	25HBC548A**30	FB4CNF048+TXV		46,000	11.5	14.0	46,000	3 68	8.0	29,200	2.56
3810571	25HBC548A**30	FB4CNF060		47,000	12.0	14.5	46,000	3 80	8.4	29,200	2.62
3646311	25HBC548A**30	FE4AN(B,F)005+UI		46,500	12.5	15.0	45,000	3.76	8.1	28,400	2.64
3646312	25HBC548A**30	FE4ANB006+UI		47,000	12.5	15.5	45,500	3 90	8.3	28,400	2.70
3646315	25HBC548A**30	FV4CN(B F)005		46,500	12.5	15.0	45,000	3.76	8.1	28,400	2.64
3646316	25HBC548A**30	FV4CNB006		47,000	12.5	15.5	45,500	3 90	8.5	28,400	2.70
3646320	25HBC548A**30	FX4DN(B,F)061		48,000	12.5	15.0	46,000	3 96	8.5	29,200	2.70
3646323	25HBC548A**30	FY5BNB060		47,000	11.5	13.5	47,000	3.74	8.2	30,000	2.56
3810572	25HBC548A**30	FY5BNF048		47,000	11.5	13.0	46,000	3.76	8.2	29,400	2.60
3692777	25HBC548A**30	FY5BNF048+TXV		46,500	12.0	14.0	46,000	3.74	8.2	29,400	2.60
3646391	25HBC560A**30	†FX4DN(B,F)061		57,000	12.5	15.0	57,000	3 86	8.7	35,400	2.72
3646336	25HBC560A**30	CAP**6021A**	58CV(A,X)110–20	55,500	11.5	13.5	56,500	3 66	8.1	35,800	2.60
3646355	25HBC560A**30	CAP**6021A**	58ME(B,C)100–20	55,500	12.0	14.0	56,500	3 68	8.1	35,400	2.62
3646367	25HBC560A**30	CAP**6021A**	58PH*110–20	55,500	12.0	14.0	56,500	3.72	8.2	35,600	2.64
4804886	25HBC560A**30	CAP**6021A**	59*N*A100V21**20	55,000	11.4	13.7	57,500	3 58	8.0	36,000	2.56
3646377	25HBC560A**30	CAP**6021A**+TDR		55,500	11.5	13.5	56,500	3 68	8.1	36,000	2.60
3646340	25HBC560A**30	CAP**6024A**	58CV(A,X)135–22	55,500	12.0	14.0	56,500	3.72	8.4	35,600	2.64
3646346	25HBC560A**30	CAP**6024A**	58CV(A,X)155–22	56,000	12.0	14.5	56,500	3.76	8.3	35,400	2.66
3646359	25HBC560A**30	CAP**6024A**	58ME(B,C)120–20	55,500	12.0	14.0	56,500	3.72	8.3	35,200	2.64
3646371	25HBC560A**30	CAP**6024A**	58PH*135–20	55,500	12.0	14.0	56,500	3 68	8.2	35,600	2.62
4804887	25HBC560A**30	CAP**6024A**	59*N*A100V21**20	55,000	11.4	13.7	57,500	3 60	8.0	36,000	2.56
4804888	25HBC560A**30	CAP**6024A**	59*N*A120V24**22	55,500	11.8	14.2	57,000	3 66	8.2	35,600	2.60
4804889	25HBC560A**30	CAP**6024A**	59*P5A120E24**22	55,500	11.8	14.2	57,000	3 66	8.2	35,600	2.60
3646378	25HBC560A**30	CAP**6024A**+TDR		55,500	11.5	13.5	56,500	3 68	8.2	36,000	2.60
3646352	25HBC560A**30	CAP**6025A**	58HDV100––20	55,500	11.5	13.5	58,000	3 64	8.1	36,400	2.58
4804890	25HBC560A**30	CAP**6025A**	59*N*A100V21**20	55,000	11.4	13.7	57,500	3 60	8.0	36,000	2.56
4804891	25HBC560A**30	CAP**6025A**	59*N*A120V24**22	55,500	11.8	14.2	57,000	3 66	8.2	35,600	2.60
4804892	25HBC560A**30	CAP**6025A**	59*P5A120E24**22	55,500	11.8	14.2	57,000	3 66	8.2	35,600	2.60
3646379	25HBC560A**30	CAP**6025A**+TDR		55,500	11.5	13.5	56,500	3 68	8.2	36,000	2.60
3646337	25HBC560A**30	CNPH*6024A**	58CV(A,X)110–20	55,500	11.5	14.0	56,500	3 68	8.1	35,800	2.62
3646341	25HBC560A**30	CNPH*6024A**	58CV(A,X)135–22	55,500	12.0	14.0	56,500	3.72	8.4	35,400	2.64
3646347	25HBC560A**30	CNPH*6024A**	58CV(A,X)155–22	56,000	12.0	14.5	56,500	3.74	8.3	35,400	2.66
3756392	25HBC560A**30	CNPH*6024A**	58HDV080––20	55,500	11.2	13.0	58,000	3 62	8.0	36,800	2.56
3756393	25HBC560A**30	CNPH*6024A**	58HDV100––20	55,500	11.5	13.5	57,500	3 64	8.0	36,400	2.58
3646353	25HBC560A**30	CNPH*6024A**	58ME(B,C)080–16	55,000	11.5	13.5	56,500	3 60	8.0	35,600	2.58
3646356	25HBC560A**30	CNPH*6024A**	58ME(B,C)100–20	55,500	12.0	14.0	56,500	3 68	8.1	35,400	2.62
3646360	25HBC560A**30	CNPH*6024A**	58ME(B,C)120–20	55,500	12.0	14.5	56,500	3.72	8.3	35,200	2.64
3646368	25HBC560A**30	CNPH*6024A**	58PH*110–20	55,500	12.0	14.0	56,500	3.72	8.2	35,400	2.64
3646372	25HBC560A**30	CNPH*6024A**	58PH*135–20	55,500	12.0	14.0	56,500	3 68	8.2	35,400	2.62
3810590	25HBC560A**30	CNPH*6024A**	58VLR120–20	55,500	11.5	14.0	57,500	3 68	8.2	35,800	2.60
4804899	25HBC560A**30	CNPH*6024A**	59*N*A100V21**20	55,000	11.4	13.7	57,000	3 58	8.0	35,800	2.56
4804900	25HBC560A**30	CNPH*6024A**	59*N*A120V24**22	55,500	11.8	14.2	57,000	3 66	8.2	35,400	2.60
4804901	25HBC560A**30	CNPH*6024A**	59*P5A120E24**22	55,500	11.8	14.2	57,000	3 66	8.2	35,600	2.60
3646380	25HBC560A**30	CNPH*6024A**+TDR		55,500	11.5	13.5	56,500	3 66	8.2	36,000	2.60
3646338	25HBC560A**30	CNPH*6124A**	58CV(A,X)110–20	56,000	11.5	14.0	56,500	3.72	8.2	36,000	2.62
3646342	25HBC560A**30	CNPH*6124A**	58CV(A,X)135–22	56,000	12.0	14.0	56,500	3.76	8.5	35,600	2.66
3646348	25HBC560A**30	CNPH*6124A**	58CV(A,X)155–22	56,000	12.0	14.5	56,500	3 80	8.5	35,600	2.68
3756394	25HBC560A**30	CNPH*6124A**	58HDV080––20	56,000	11.2	13.0	58,500	3 68	8.1	36,800	2.58
3756395	25HBC560A**30	CNPH*6124A**	58HDV100––20	55,500	11.5	13.5	58,000	3 68	8.1	36,400	2.60
3646357	25HBC560A**30	CNPH*6124A**	58ME(B,C)100–20	55,500	12.0	14.0	56,500	3.72	8.2	35,600	2.64
3646361	25HBC560A**30	CNPH*6124A**	58ME(B,C)120–20	56,000	12.0	14.5	56,500	3.76	8.3	35,400	2.66
3646369	25HBC560A**30	CNPH*6124A**	58PH*110–20	56,000	12.0	14.0	56,500	3.76	8.2	35,600	2.66
3646373	25HBC560A**30	CNPH*6124A**	58PH*135–20	55,500	12.0	14.0	56,500	3.72	8.2	35,600	2.64
4804902	25HBC560A**30	CNPH*6124A**	59*N*A100V21**20	55,000	11.4	13.7	57,500	3 62	8.0	36,000	2.56
4804903	25HBC560A**30	CNPH*6124A**	59*N*A120V24**22	55,500	11.8	14.2	57,000	3.70	8.2	35,800	2.62
4804904	25HBC560A**30	CNPH*6124A**	59*P5A120E24**22	55,500	11.8	14.2	57,000	3.70	8.2	35,600	2.62
3646381	25HBC560A**30	CNPH*6124A**		56,000	11.5	14.0	56,500	3.72	8.4	36,200	2.62
3646382	25HBC560A**30	CNPH*6124A**+TDR		56,000	11.5	13.5	56,500	3.72	8.4	36,200	2.62
3646343	25HBC560A**30	CNPV*6024A**	58CV(A,X)135–22	55,500	12.0	14.0	56,500	3.72	8.4	35,400	2.64
3646349	25HBC560A**30	CNPV*6024A**	58CV(A,X)155–22	56,000	12.0	14.5	56,500	3.74	8.3	35,400	2.66
4149633	25HBC560A**30	CNPV*6024A**	58HDV100––20	55,500	11.5	13.5	57,500	3 64	8.0	36,400	2.58
3756390	25HBC560A**30	CNPV*6024A**	58HDV100––20 (DWNFLW ONLY)	55,500	11.5	13.5	57,500	3 64	8.0	36,400	2.58
3646362	25HBC560A**30	CNPV*6024A**	58ME(B,C)120–20	55,500	12.0	14.5	56,500	3.72	8.3	35,200	2.64
3646374	25HBC560A**30	CNPV*6024A**	58PH*135–20	55,500	12.0	14.0	56,500	3 68	8.2	35,400	2.62
4804893	25HBC560A**30	CNPV*6024A**	59*N*A100V21**20	55,000	11.4	13.7	57,000	3 58	8.0	35,800	2.56
4804894	25HBC560A**30	CNPV*6024A**	59*N*A120V24**22	55,500	11.8	14.2	57,000	3 66	8.2	35,400	2.60
4804895	25HBC560A**30	CNPV*6024A**	59*P5A120E24**22	55,500	11.8	14.2	57,000	3 66	8.2	35,600	2.60
3646383	25HBC560A**30	CNPV*6024A**+TDR		55,500	11.5	13.5	56,500	3 66	8.2	36,000	2.60
3646344	25HBC560A**30	CNPV*6124A**	58CV(A,X)135–22	56,500	12.0	14.5	56,500	3 82	8.5	35,600	2.68
3646350	25HBC560A**30	CNPV*6124A**	58CV(A,X)155–22	56,500	12.0	14.5	56,500	3 84	8.5	35,600	2.70
4149634	25HBC560A**30	CNPV*6124A**	58HDV100––20	56,500	11.5	13.5	58,000	3.74	8.2	36,600	2.62
3756391	25HBC560A**30	CNPV*6124A**	58HDV100––20 (DWNFLW ONLY)	56,500	11.5	13.5	58,000	3.74	8.2	36,600	2.62
3646363	25HBC560A**30	CNPV*6124A**	58ME(B,C)120–20	56,500	12.0	14.5	56,500	3 82	8.5	35,400	2.68
3646365	25HBC560A**30	CNPV*6124A**	58MV(B,C)120–20	56,000	11.8	14.0	56,500	3.74	8.3	36,000	2.64

See notes on page 36

COMBINATION RATINGS CONTINUED

AHRI Ref. No.	Model Number	Coil Model Number	Furnace Model Number	Cooling Capacity	EER	SEER	High Temp		HSPF	Low Temp	
							E Capacity	E COP		H Capacity	H COP
3646375	25HBC560A**30	CNPV*6124A**	58PH*135−20	56,500	12.0	14.5	56,500	3.78	8.5	35,600	2.66
3646394	25HBC560A**30	CNPV*6124A**	58UVB120−20	56,000	11.8	14.0	56,500	3.74	8.3	36,000	2.64
4804896	25HBC560A**30	CNPV*6124A**	59*N*A100V21**20	55,500	11.5	14.0	57,500	3 68	8.2	36,000	2.60
4804897	25HBC560A**30	CNPV*6124A**	59*N*A120V24**22	56,000	11.8	14.2	57,000	3.76	8.2	35,600	2.64
4804898	25HBC560A**30	CNPV*6124A**	59*P5A120E24**22	56,000	11.8	14.2	57,500	3.76	8.2	35,800	2.64
3646384	25HBC560A**30	CNPV*6124A**+TDR		56,500	11.5	14.0	56,500	3.76	8.4	36,200	2.64
3646339	25HBC560A**30	CSPH*6012A**	58CV(A,X)110−20	56,000	11.5	14.0	56,500	3.74	8.1	35,800	2.64
3646345	25HBC560A**30	CSPH*6012A**	58CV(A,X)135−22	56,000	12.0	14.5	56,500	3.76	8.4	35,600	2.66
3646351	25HBC560A**30	CSPH*6012A**	58CV(A,X)155−22	56,000	12.0	14.5	56,500	3 80	8.3	35,400	2.68
3756396	25HBC560A**30	CSPH*6012A**	58HDV080−−20	55,500	11.2	13.0	58,000	3 68	8.0	36,800	2.58
3756397	25HBC560A**30	CSPH*6012A**	58HDV100−−20	55,500	11.5	13.5	57,500	3.70	8.0	36,400	2.60
3646354	25HBC560A**30	CSPH*6012A**	58ME(B,C)080−16	55,500	11.5	14.0	56,500	3 66	8.0	35,600	2.60
3646358	25HBC560A**30	CSPH*6012A**	58ME(B,C)100−20	56,000	12.0	14.0	56,500	3.74	8.2	35,400	2.64
3646364	25HBC560A**30	CSPH*6012A**	58ME(B,C)120−20	56,000	12.0	14.5	56,500	3.78	8.3	35,400	2.66
3646366	25HBC560A**30	CSPH*6012A**	58MV(B,C)120−20	55,500	11.5	14.0	56,500	3.70	8.1	35,800	2.62
3646370	25HBC560A**30	CSPH*6012A**	58PH*110−20	56,000	12.0	14.5	56,500	3.78	8.2	35,600	2.66
3646376	25HBC560A**30	CSPH*6012A**	58PH*135−20	56,000	12.0	14.0	56,500	3.74	8.2	35,600	2.64
3810591	25HBC560A**30	CSPH*6012A**	58VLR120−20	56,000	11.5	14.0	57,500	3.72	8.2	36,000	2.62
4804905	25HBC560A**30	CSPH*6012A**	59*N*A100V21**20	55,500	11.4	13.7	57,500	3 64	8.0	36,000	2.58
4804906	25HBC560A**30	CSPH*6012A**	59*N*A120V24**22	55,500	11.8	14.2	57,000	3.72	8.2	35,600	2.62
4804907	25HBC560A**30	CSPH*6012A**	59*P5A120E24**22	55,500	11.8	14.2	57,000	3.72	8.2	35,600	2.62
3646385	25HBC560A**30	CSPH*6012A**+TDR		55,500	11.5	13.5	56,500	3.72	8.2	36,200	2.62
3810589	25HBC560A**30	FB4CNF060		55,500	11.5	14.0	56,000	3 68	8.2	35,600	2.60
3646387	25HBC560A**30	FE4ANB006+UI		56,500	12.5	14.5	56,000	3 86	8.5	35,400	2.72
3646389	25HBC560A**30	FV4CNB006		56,500	12.5	14.5	56,000	3 86	8.5	35,400	2.72
3646393	25HBC560A**30	FY5BNB060		56,000	11.5	13.5	58,000	3 68	8.2	36,400	2.58

* Ratings are net values reflecting the effects of circulating fan heat. Supplemental electric heat is not included. Ratings are based on:
Cooling Standard: 80°F (27°C) db 67°F (19°C) wb indoor entering air temperature and 95°F (35°C) db air entering outdoor unit.
High−Temp Heating Standard: 70°F (21°C) db indoor entering air temperature and 47°F (8°C) db 43°F (6°C) wb air entering outdoor unit.
Low−Temp Heating Standard: 70°F (21°C) db indoor entering air temperature and 17°F (−8°C) db 15°F (−9°C) wb air entering outdoor unit.
COP — Coefficient of Performance
EER — Energy Efficiency Ratio
HSPF — Heating Seasonal Performance Factor
SEER — Seasonal Energy Efficiency Ratio
TDR — Time−Delay Relay
UI — User Interface
NOTE: Ratings contained in this document are subject to change at any time. Always refer to the AHRI directory (www.ahridirectory.org) for the most up−to−date ratings information.

DETAILED COOLING CAPACITIES#

EVAPORATOR AIR		CONDENSER ENTERING AIR TEMPERATURES °F (°C)																	
		75 (23.9)			85 (29.4)			95 (35)			105 (40.6)			115 (46.1)			125 (51.7)		
CFM	EWB °F (°C)	Capacity MBtuh		Total System KW**	Capacity MBtuh		Total System KW**	Capacity MBtuh		Total System KW**	Capacity MBtuh		Total System KW**	Capacity MBtuh		Total System KW**	Capacity MBtuh		Total System KW**
		Total	Sens‡		Total	Sens‡		Total	Sens‡		Total	Sens‡		Total	Sens‡		Total	Sens‡	
25HBC518A**30 Outdoor Section With FX4DNF019 Indoor Section																			
525	72 (22.2)	21.38	11.10	1.10	20.34	10.70	1.25	19.25	10.28	1.42	18.10	9.85	1.60	16.88	9.40	1.80	15.59	8.93	2.03
	67 (19.4)	19.37	13.52	1.10	18.43	13.12	1.25	17.43	12.70	1.41	16 38	12 26	1.59	15.26	11.81	1.79	14.08	11 33	2.02
	63 (17.2)††	17.92	13.00	1.10	17.05	12 60	1.25	16.12	12.18	1.41	15.14	11.74	1.59	14.10	11.28	1.79	12.99	10 80	2.01
	62 (16.7)	17.54	15.88	1.10	16.69	15.47	1.25	15.79	15.04	1.41	14 85	14 58	1.59	13.91	13.91	1.78	13.03	13 03	2.01
	57 (13.9)	16.80	16.80	1.10	16.15	16.15	1.25	15.45	15.45	1.41	14.70	14.70	1.59	13.89	13.89	1.78	13.01	13 01	2.01
600	72 (22.2)	21.87	11.69	1.11	20.79	11 28	1.26	19.64	10.85	1.43	18.44	10.41	1.61	17.17	9 95	1.81	15.83	9.47	2.04
	67 (19.4)	19.84	14.44	1.11	18.85	14 03	1.26	17.80	13.60	1.42	16.70	13.15	1.60	15.54	12.69	1.80	14.31	12 20	2.03
	63 (17.2)††	18.37	13.86	1.11	17.45	13.45	1.26	16.48	13.02	1.42	15.45	12 57	1.60	14.37	12.10	1.80	13.22	11 61	2.02
	62 (16.7)	18.01	17.11	1.11	17.13	16 68	1.26	16.21	16.12	1.42	15 36	15 36	1.60	14.49	14.49	1.80	13.56	13 56	2.02
	57 (13.9)	17.61	17.61	1.11	16.90	16 90	1.26	16.15	16.15	1.42	15 34	15 34	1.60	14.47	14.47	1.80	13.54	13 54	2.02
675	72 (22.2)	22.26	12.24	1.12	21.13	11 82	1.27	19.94	11.39	1.44	18.70	10 94	1.62	17.39	10.48	1.82	16.02	10 00	2.05
	67 (19.4)	20.21	15.33	1.12	19.17	14 90	1.27	18.08	14.47	1.43	16 95	14 01	1.61	15.75	13.53	1.81	14.49	13 03	2.04
	63 (17.2)††	18.73	14.69	1.12	17.76	14 27	1.27	16.76	13.83	1.43	15.70	13 37	1.61	14.58	12.89	1.81	13.40	12 38	2.03
	62 (16.7)	18.42	18.24	1.12	17.56	17 56	1.27	16.76	16.76	1.43	15 90	15 90	1.61	14.98	14.98	1.81	14.00	14 00	2.04
	57 (13.9)	18.29	18.29	1.12	17.54	17 54	1.27	16.74	16.74	1.43	15 88	15 88	1.61	14.96	14.96	1.81	13.98	13 98	2.04

COOLING INDOOR MODEL	CAPACITY	POWER	FURNACE MODEL
*FX4DNF019	1.00	1.00	
FB4CNF018	0.99	1.00	
FB4CNF024	0.98	0.99	
FE4ANF002	0.99	0.96	
FF1ENP018	0.97	1.09	
FF1ENP019	0.98	1.03	
FF1ENP024	0.98	1.10	
FF1ENP025	1.00	1.01	
FV4BNF002	0.99	0.96	
FV4CNF002	0.99	0.96	
FX4CNF018	0.98	0.99	
FX4CNF024	0.99	1.00	
FX4DNF025	1.01	1.01	
FY4ANF018	0.97	1.09	
FY4ANF024	0.97	1.09	
FY5BNF018	0.98	1.07	
FY5BNF024	0.98	1.07	
CAP**1814A**	0.97	1.09	
CAP**2414A**	0.98	1.10	
CAP**2417A**	0.98	1.10	
CNPF*2418A**	0.98	1.10	
CNPH*2417A**	0.98	1.10	
CNPV*1814A**	0.97	1.09	
CNPV*1917A**	0.99	1.08	
CNPV*2414A**	0.98	1.10	
CNPV*2417A**	0.98	1.10	
CSPH*2412A**	0.98	1.10	
CAP**1814A**	0.97	1.01	58CV(A,X)070–12
CAP**2414A**	0.98	0.99	58CV(A,X)070–12
CNPH*2417A**	0.97	0.98	58CV(A,X)070–12
CNPV*1814A**	0.97	1.01	58CV(A,X)070–12
CNPV*2414A**	0.98	0.99	58CV(A,X)070–12
CSPH*2412A**	0.98	0.99	58CV(A,X)070–12
CAP**2417A**	0.98	0.99	58CV(A,X)090–16
CNPH*2417A**	0.98	0.99	58CV(A,X)090–16
CNPV*1917A**	0.99	1.00	58CV(A,X)090–16
CNPV*2417A**	0.98	0.99	58CV(A,X)090–16
CSPH*2412A**	0.98	0.99	58CV(A,X)090–16

COOLING INDOOR MODEL	CAPACITY	POWER	FURNACE MODEL
CAP**2417A**	1.01	0.98	58ME(B,C)040–12
CNPH*2417A**	1.00	1.01	58ME(B,C)040–12
CNPV*1917A**	1.01	0.98	58ME(B,C)040–12
CNPV*2417A**	1.00	1.01	58ME(B,C)040–12
CSPH*2412A**	1.00	1.01	58ME(B,C)040–12
CAP**2417A**	1.00	0.97	58ME(B,C)060–12
CNPH*2417A**	0.99	1.00	58ME(B,C)060–12
CNPV*1917A**	1.01	0.98	58ME(B,C)060–12
CNPV*2417A**	0.99	1.00	58ME(B,C)060–12
CSPH*2412A**	0.99	1.00	58ME(B,C)060–12
CAP**2417A**	0.98	0.99	58MV(B,C)060–14
CNPH*2417A**	0.98	0.99	58MV(B,C)060–14
CNPV*1917A**	0.98	0.99	58MV(B,C)060–14
CNPV*2417A**	0.98	0.99	58MV(B,C)060–14
CSPH*2412A**	0.98	0.99	58MV(B,C)060–14
CNPH*2417A**	0.97	0.98	58MV(B,C)080–14
CSPH*2412A**	0.98	0.99	58MV(B,C)080–14
CNPH*2417A**	0.98	0.99	58MVB040–14
CSPH*2412A**	0.98	0.99	58MVB040–14
CAP**1814A**	0.98	1.03	58PH*045–08
CAP**2414A**	0.99	1.00	58PH*045–08
CNPH*2417A**	0.99	1.00	58PH*045–08
CNPV*1814A**	0.98	1.03	58PH*045–08
CNPV*2414A**	0.99	1.00	58PH*045–08
CSPH*2412A**	0.99	1.00	58PH*045–08
CAP**2417A**	0.97	1.01	59*N*A060V17**14
CNPH*2417A**	0.97	1.01	59*N*A060V17**14
CNPV*1917A**	0.98	1.02	59*N*A060V17**14
CNPV*2417A**	0.97	1.01	59*N*A060V17**14
CSPH*2412A**	0.98	1.02	59*N*A060V17**14
CAP**2417A**	0.97	1.01	59*N*A080V17**14
CNPH*2417A**	0.97	1.01	59*N*A080V17**14
CNPV*1917A**	0.97	0.97	59*N*A080V17**14
CNPV*2417A**	0.97	1.01	59*N*A080V17**14
CSPH*2412A**	0.97	1.01	59*N*A080V17**14
CAP**1814A**	0.95	1.03	59*P5A040E14**10
CAP**2414A**	0.97	1.02	59*P5A040E14**10
CAP**2417A**	0.97	1.01	59*P5A040E14**10

COOLING INDOOR MODEL	CAPACITY	POWER	FURNACE MODEL
CNPH*2417A**	0 96	1 02	59*P5A040E14**10
CNPV*1814A**	0 95	1 01	59*P5A040E14**10
CNPV*1917A**	0 97	1 01	59*P5A040E14**10
CNPV*2414A**	0 96	1 02	59*P5A040E14**10
CNPV*2417A**	0 96	1 02	59*P5A040E14**10
CSPH*2412A**	0 97	1 02	59*P5A040E14**10

See note on pg. 48

DETAILED COOLING CAPACITIES# CONTINUED

EVAPORATOR AIR		CONDENSER ENTERING AIR TEMPERATURES °F (°C)																	
		75 (23.9)			85 (29.4)			95 (35)			105 (40.6)			115 (46.1)			125 (51.7)		
CFM	EWB °F (°C)	Capacity MBtuh		Total System KW**	Capacity MBtuh		Total System KW**	Capacity MBtuh		Total System KW**	Capacity MBtuh		Total System KW**	Capacity MBtuh		Total System KW**	Capacity MBtuh		Total System KW**
		Total	Sens‡		Total	Sens‡		Total	Sens‡		Total	Sens‡		Total	Sens‡		Total	Sens‡	
25HBC524A**30 Outdoor Section With FX4DNF025 Indoor Section																			
700	72 (22.2)	28.25	14.67	1.50	27.04	14.21	1.70	25.76	13.71	1 91	24.38	13.19	2.15	22.88	12 63	2.41	21.23	12.03	2.71
	67 (19.4)	25.63	17.92	1.48	24.52	17.44	1 67	23 33	16.94	1 88	22.05	16.40	2.12	20.66	15 83	2.38	19.12	15.20	2.68
	63 (17.2)††	23.76	17.24	1.46	22.71	16.76	1 66	21 59	16.25	1 87	20.38	15.71	2.10	19.07	15.13	2.37	17.61	14.49	2.68
	62 (16.7)	23.28	21.08	1.46	22.25	20.58	1 65	21.17	20.06	1 87	20.00	19.48	2.10	18.77	18 68	2.37	17.59	17.59	2.68
	57 (13.9)	22.30	22.30	1.46	21.50	21.50	1 65	20 65	20.65	1 86	19.72	19.72	2.10	18.70	18.70	2.37	17.56	17.56	2.68
800	72 (22.2)	28.87	15.41	1.53	27.60	14.93	1.73	26 26	14.44	1 94	24.83	13 91	2.17	23.27	13 34	2.44	21.57	12.73	2.73
	67 (19.4)	26.21	19.09	1.50	25.04	18.60	1 69	23 80	18.09	1 90	22.47	17 55	2.14	21.02	16 96	2.40	19.44	16.32	2.71
	63 (17.2)††	24.31	18.34	1.48	23.21	17.84	1 68	22 04	17.33	1 89	20.78	16.77	2.12	19.42	16.18	2.39	17.92	15.53	2.70
	62 (16.7)	23.85	22.64	1.48	22.80	22.10	1 68	21 69	21.51	1 89	20.58	20 58	2.12	19.49	19.49	2.39	18.28	18.28	2.70
	57 (13.9)	23.30	23.30	1.48	22.45	22.45	1 67	21 53	21.53	1 89	20.55	20 55	2.12	19.46	19.46	2.39	18.26	18.26	2.70
900	72 (22.2)	29.34	16.11	1.56	28.03	15.63	1.75	26 65	15.12	1 96	25.17	14 59	2.20	23.56	14 01	2.46	21.82	13.39	2.76
	67 (19.4)	26.65	20.21	1.52	25.44	19.71	1.72	24.16	19.19	1 93	22.79	18 63	2.16	21.30	18 03	2.43	19.68	17.38	2.73
	63 (17.2)††	24.73	19.38	1.50	23.59	18.88	1.70	22 39	18.35	1 91	21.09	17.78	2.14	19.69	17.17	2.41	18.16	16.50	2.71
	62 (16.7)	24.35	24.04	1.50	23.29	23.29	1.70	22 31	22.31	1 91	21.27	21 27	2.15	20.12	20.12	2.41	18.86	18.86	2.72
	57 (13.9)	24.14	24.14	1.50	23.24	23.24	1.70	22 28	22.28	1 91	21.24	21 24	2.15	20.10	20.10	2.41	18.84	18.84	2.72

COOLING INDOOR MODEL	CAPACITY	POWER	FURNACE MODEL
*FX4DNF025	1.00	1.00	
FE4AN(B,F)003	0.99	0.95	
FE4ANF002	0.99	0.99	
FF1ENP024	0.98	1.11	
FF1ENP025	0.99	1.03	
FF1ENP030	0.98	1.09	
FF1ENP031	0.99	1.03	
FF1ENP037	0.99	0.99	
FV4BN(B,F)003	0.99	0.99	
FV4BNF002	0.99	0.99	
FV4CN(B,F)003	0.99	0.99	
FV4CNF002	0.99	0.99	
FX4CNF024	0.99	1.03	
FX4CNF030	0.99	0.99	
FX4DN(B,F)031	1.00	1.00	
FY4ANF024	0.98	1.11	
FY4ANF030	0.99	1.08	
FY5BNF024	0.98	1.02	
FY5BNF030	0.98	1.02	
CAP**2414A**	0.98	1.09	
CAP**2417A**	0.98	1.09	
CAP**3014A**	0.98	1.09	
CAP**3017A**	0.98	1.09	
CNPF*2418A**	0.98	1.09	
CNPH*2417A**	0.98	1.09	
CNPH*3017A**	0.98	1.09	
CNPV*2414A**	0.98	1.09	
CNPV*2417A**	0.98	1.09	
CNPV*3014A**	0.98	1.09	
CNPV*3017A**	0.98	1.09	
CNPV*3117A**	0.98	1.06	
CSPH*2412A**	0.98	1.09	
CSPH*3012A**	0.98	1.09	
FB4CNF024	0.98	1.02	
FB4CNF030	0.98	0.98	
CAP**2414A**	0.98	0.98	58CV(A,X)070–12
CAP**3014A**	0.98	0.98	58CV(A,X)070–12

COOLING INDOOR MODEL	CAPACITY	POWER	FURNACE MODEL
CNPH*2417A**	0.98	0.98	58CV(A X)070–12
CNPH*3017A**	0.98	0.98	58CV(A X)070–12
CNPV*2414A**	0.98	0.98	58CV(A X)070–12
CNPV*3014A**	0.98	0.98	58CV(A X)070–12
CSPH*2412A**	0.98	0.98	58CV(A X)070–12
CSPH*3012A**	0.98	0.98	58CV(A X)070–12
CAP**2417A**	0.98	0.98	58CV(A X)090–16
CAP**3017A**	0.98	0.98	58CV(A X)090–16
CNPH*2417A**	0.98	0.98	58CV(A X)090–16
CNPH*3017A**	0.98	0.98	58CV(A X)090–16
CNPV*2417A**	0.98	0.98	58CV(A X)090–16
CNPV*3017A**	0.98	0.98	58CV(A X)090–16
CNPV*3117A**	0.98	0.94	58CV(A X)090–16
CSPH*2412A**	0.98	0.98	58CV(A X)090–16
CSPH*3012A**	0.98	0.98	58CV(A X)090–16
CNPH*2417A**	0.98	0.98	58CV(A X)110–20
CNPH*3017A**	0.98	0.98	58CV(A X)110–20
CSPH*2412A**	0.98	0.98	58CV(A X)110–20
CSPH*3012A**	0.98	0.98	58CV(A X)110–20
CNPH*2417A**	0.98	0.98	58CV(A X)135–22
CNPH*3017A**	0.98	0.98	58CV(A X)135–22
CSPH*2412A**	0.98	0.98	58CV(A X)135–22
CSPH*3012A**	0.98	0.98	58CV(A X)135–22
CNPH*2417A**	0.98	0.98	58CV(A X)155–22
CNPH*3017A**	0.98	0.98	58CV(A X)155–22
CSPH*2412A**	0.98	0.98	58CV(A X)155–22
CSPH*3012A**	0.98	0.98	58CV(A X)155–22
CAP**3619A**	1.00	1.00	58HDV040––12
CAP**3619A**	1.00	1.00	58HDV060––12
CAP**2417A**	0.98	0.98	58ME(B,C)040–12
CAP**3017A**	0.98	0.98	58ME(B,C)040–12
CNPH*2417A**	0.98	0.98	58ME(B,C)040–12
CNPH*3017A**	0.98	0.98	58ME(B,C)040–12
CNPV*2417A**	0.98	0.98	58ME(B,C)040–12
CNPV*3017A**	0.98	0.98	58ME(B,C)040–12
CNPV*3117A**	0.98	0.94	58ME(B,C)040–12
CSPH*2412A**	0.98	0.98	58ME(B,C)040–12

COOLING INDOOR MODEL	CAPACITY	POWER	FURNACE MODEL
CSPH*3012A**	0.98	0.98	58ME(B,C)040–12
CAP**2417A**	0.98	0.98	58ME(B,C)060–12
CAP**3017A**	0.98	0.98	58ME(B,C)060–12
CNPH*2417A**	0.98	0.98	58ME(B,C)060–12
CNPH*3017A**	0.98	0.98	58ME(B,C)060–12
CNPV*2417A**	0.98	0.98	58ME(B,C)060–12
CNPV*3017A**	0.98	0.98	58ME(B,C)060–12
CNPV*3117A**	0.98	0.94	58ME(B,C)060–12
CSPH*2412A**	0.98	0.98	58ME(B,C)060–12
CSPH*3012A**	0.98	0.98	58ME(B,C)060–12
CAP**2417A**	0.98	0.98	58ME(B,C)080–12
CAP**3017A**	0.98	0.98	58ME(B,C)080–12
CNPH*2417A**	0.98	0.98	58ME(B,C)080–12
CNPH*3017A**	0.98	0.98	58ME(B,C)080–12
CNPV*2417A**	0.98	0.98	58ME(B,C)080–12
CNPV*3017A**	0.98	0.98	58ME(B,C)080–12
CNPV*3117A**	0.98	0.94	58ME(B,C)080–12
CSPH*2412A**	0.98	0.98	58ME(B,C)080–12
CSPH*3012A**	0.98	0.98	58ME(B,C)080–12
CAP**2417A**	0.98	0.98	58MV(B,C)060–14
CAP**3017A**	0.98	0.98	58MV(B,C)060–14
CNPH*2417A**	0.98	0.98	58MV(B,C)060–14
CNPH*3017A**	0.98	0.98	58MV(B,C)060–14
CNPV*2417A**	0.98	0.98	58MV(B,C)060–14
CNPV*3017A**	0.98	0.98	58MV(B,C)060–14
CNPV*3117A**	0.98	0.94	58MV(B,C)060–14
CSPH*2412A**	0.98	0.98	58MV(B,C)060–14
CSPH*3012A**	0.98	0.98	58MV(B,C)060–14
CNPH*2417A**	0.98	0.98	58MV(B,C)080–14
CNPH*3017A**	0.98	0.98	58MV(B,C)080–14
CSPH*2412A**	0.98	0.98	58MV(B,C)080–14
CSPH*3012A**	0.98	0.98	58MV(B,C)080–14
CNPH*2417A**	0.97	0.97	58MV(B,C)080–20
CNPH*3017A**	0.98	0.98	58MV(B,C)080–20
CSPH*2412A**	0.98	0.98	58MV(B,C)080–20
CSPH*3012A**	0.98	0.98	58MV(B,C)080–20
CNPH*2417A**	0.98	0.98	58MV(B,C)100–20

DETAILED COOLING CAPACITIES# CONTINUED

25HBC524A30 Outdoor Section With FX4DNF025 Indoor Section**

COOLING INDOOR MODEL	CAPACITY	POWER	FURNACE MODEL
CNPH*3017A**	0.98	0.98	58MV(B,C)100–20
CSPH*2412A**	0.98	0.98	58MV(B,C)100–20
CSPH*3012A**	0.98	0.98	58MV(B,C)100–20
CNPH*2417A**	0.98	0.98	58MV(B,C)120–20
CNPH*3017A**	0.98	0.98	58MV(B,C)120–20
CSPH*2412A**	0.98	0.98	58MV(B,C)120–20
CSPH*3012A**	0.98	0.98	58MV(B,C)120–20
CNPH*2417A**	0.98	0.98	58MVB040–14
CNPH*3017A**	0.98	0.98	58MVB040–14
CSPH*2412A**	0.98	0.98	58MVB040–14
CSPH*3012A**	0.98	0.98	58MVB040–14
CAP**2414A**	0.98	0.98	58PH*045–08
CAP**3014A**	0.98	0.98	58PH*045–08
CNPH*2417A**	0.98	1.02	58PH*045–08
CNPH*3017A**	0.98	0.98	58PH*045–08
CNPV*2414A**	0.98	0.98	58PH*045–08
CNPV*3014A**	0.98	0.98	58PH*045–08
CSPH*2412A**	0.98	0.98	58PH*045–08
CSPH*3012A**	0.98	0.98	58PH*045–08
CAP**2417A**	0.97	0.95	59*N*A060V17**14
CAP**3017A**	0.98	0.95	59*N*A060V17**14
CNPH*2417A**	0.97	0.96	59*N*A060V17**14
CNPH*3017A**	0.98	0.95	59*N*A060V17**14
CNPH*3117A**	0.99	0.95	59*N*A060V17**14
CNPV*2417A**	0.97	0.96	59*N*A060V17**14
CNPV*3017A**	0.98	0.95	59*N*A060V17**14
CNPV*3117A**	0.99	0.95	59*N*A060V17**14
CSPH*2412A**	0.98	0.97	59*N*A060V17**14
CSPH*3012A**	0.98	0.96	59*N*A060V17**14
CAP**2417A**	0.97	0.94	59*N*A080V17**14
CAP**3017A**	0.98	0.94	59*N*A080V17**14
CNPH*2417A**	0.97	0.95	59*N*A080V17**14
CNPH*3017A**	0.98	0.94	59*N*A080V17**14
CNPH*3117A**	0.99	0.95	59*N*A080V17**14
CNPV*2417A**	0.97	0.95	59*N*A080V17**14
CNPV*3017A**	0.98	0.94	59*N*A080V17**14
CNPV*3117A**	0.99	0.95	59*N*A080V17**14
CSPH*2412A**	0.98	0.95	59*N*A080V17**14
CSPH*3012A**	0.98	0.95	59*N*A080V17**14
CNPH*2417A**	0.98	0.96	59*N*A100V21**20
CNPH*3017A**	0.99	0.96	59*N*A100V21**20
CNPH*3117A**	0.99	0.95	59*N*A100V21**20
CSPH*2412A**	0.99	0.97	59*N*A100V21**20
CSPH*3012A**	0.99	0.96	59*N*A100V21**20
CNPH*2417A**	0.98	0.95	59*N*A120V24**22
CNPH*3017A**	0.98	0.94	59*N*A120V24**22
CNPH*3117A**	0.99	0.95	59*N*A120V24**22
CSPH*2412A**	0.99	0.97	59*N*A120V24**22
CSPH*3012A**	0.99	0.95	59*N*A120V24**22
CAP**2414A**	0.98	1.03	59*P5A040E14**10
CAP**2417A**	0.98	1.03	59*P5A040E14**10
CAP**3014A**	0.98	1.04	59*P5A040E14**10
CAP**3017A**	0.99	1.03	59*P5A040E14**10
CNPH*2417A**	0.98	1.03	59*P5A040E14**10
CNPH*3017A**	0.99	1.03	59*P5A040E14**10
CNPH*3117A**	0.99	1.01	59*P5A040E14**10
CNPV*2414A**	0.98	1.03	59*P5A040E14**10
CNPV*2417A**	0.98	1.03	59*P5A040E14**10
CNPV*3014A**	0.98	1.04	59*P5A040E14**10

COOLING INDOOR MODEL	CAPACITY	POWER	FURNACE MODEL
CNPV*3017A**	0.99	1.03	59*P5A040E14**10
CNPV*3117A**	0.99	1.02	59*P5A040E14**10
CSPH*2412A**	0.98	1.04	59*P5A040E14**10
CSPH*3012A**	0.99	1.03	59*P5A040E14**10
CAP**2417A**	0.98	0.95	59*P5A060E17**14
CAP**3017A**	0.98	0.95	59*P5A060E17**14
CNPH*2417A**	0.97	0.95	59*P5A060E17**14
CNPH*3017A**	0.98	0.95	59*P5A060E17**14
CNPH*3117A**	0.99	0.95	59*P5A060E17**14
CNPV*2417A**	0.97	0.95	59*P5A060E17**14
CNPV*3017A**	0.98	0.95	59*P5A060E17**14
CNPV*3117A**	0.99	0.95	59*P5A060E17**14
CSPH*2412A**	0.98	0.95	59*P5A060E17**14
CSPH*3012A**	0.98	0.95	59*P5A060E17**14

See note on pg. 48

DETAILED COOLING CAPACITIES# CONTINUED

EVAPORATOR AIR		CONDENSER ENTERING AIR TEMPERATURES °F (°C)																	
		75 (23.9)			85 (29.4)			95 (35)			105 (40.6)			115 (46.1)			125 (51.7)		
CFM	EWB °F (°C)	Capacity MBtuh		Total System KW**	Capacity MBtuh		Total System KW**	Capacity MBtuh		Total System KW**	Capacity MBtuh		Total System KW**	Capacity MBtuh		Total System KW**	Capacity MBtuh		Total System KW**
		Total	Sens‡		Total	Sens‡		Total	Sens‡		Total	Sens‡		Total	Sens‡		Total	Sens‡	
25HBC530A**30 Outdoor Section With FX4DNF031 Indoor Section																			
875	72 (22 2)	34.40	17.74	1 83	32.81	17.14	2.05	31.16	16.52	2 29	29.42	15 88	2.56	27.55	15.20	2.87	25 53	14.48	3 23
	67 (19.4)	31 23	21.80	1 82	29.80	21 20	2.04	28.29	20.57	2 28	26.69	19 93	2.55	24.96	19.24	2.86	23.10	18.49	3 22
	63 (17.2)††	28 95	20.97	1 81	27.62	20 37	2.03	26.22	19.74	2 27	24.73	19 09	2.54	23.11	18.39	2.86	21 35	17.64	3 22
	62 (16.7)	28 38	25.74	1 81	27.09	25.12	2.03	25.75	24.46	2 26	24.33	23.73	2.54	22.91	22.91	2.86	21 51	21.51	3 22
	57 (13 9)	27.40	27.40	1 81	26.39	26 39	2.02	25.32	25.32	2 26	24.15	24.15	2.54	22.88	22.88	2.86	21.48	21.48	3 22
1000	72 (22 2)	35 08	18.63	1 86	33.43	18 02	2.08	31.71	17.39	2 32	29.89	16.74	2.59	27.95	16.05	2.90	25 86	15.32	3 25
	67 (19.4)	31 88	23.23	1 85	30.37	22 61	2.06	28.80	21.98	2 30	27.13	21 31	2.58	25.35	20.60	2.89	23.43	19.84	3 24
	63 (17.2)††	29 57	22.30	1 84	28.18	21 68	2.05	26.71	21.05	2 29	25.16	20 38	2.57	23.49	19.66	2.88	21 67	18.88	3 24
	62 (16.7)	29 06	27.61	1 84	27.73	26 92	2.05	26.39	26.39	2 29	25.13	25.13	2.57	23.77	23.77	2.88	22 28	22.28	3 24
	57 (13 9)	28 58	28.58	1 84	27.49	27.49	2.05	26.34	26.34	2 29	25.10	25.10	2.57	23.74	23.74	2.88	22 26	22.26	3 24
1125	72 (22 2)	35 61	19.48	1 89	33.89	18 86	2.11	32.11	18.22	2 35	30.24	17 56	2.62	28.25	16.86	2.93	26.10	16.12	3 28
	67 (19.4)	32 37	24.59	1 87	30.81	23 96	2.09	29.18	23.31	2 33	27.47	22 63	2.60	25.64	21.90	2.91	23 68	21.10	3 27
	63 (17.2)††	30 05	23.56	1 86	28.60	22 94	2.08	27.09	22.29	2 32	25.49	21 60	2.59	23.78	20.86	2.91	21 93	20.05	3 27
	62 (16.7)	29 68	29.51	1 86	28.45	28.45	2.08	27.22	27.22	2 32	25.91	25 91	2.60	24.49	24.49	2.91	22 92	22.92	3 27
	57 (13 9)	29 56	29.56	1 86	28.41	28.41	2.08	27.19	27.19	2 32	25.88	25 88	2.59	24.46	24.46	2.91	22 89	22.89	3 27

COOLING INDOOR MODEL	CAPACITY	POWER	FURNACE MODEL
*FX4DN(B F)031	1.00	1.00	
FB4CNF030	0.98	1.02	
FB4CNF036	0.98	1.02	
FE4AN(B,F)003	0.99	0.99	
FE4AN(B,F)005	1.01	0.97	
FE4ANF002	0.98	0.98	
FF1ENP030	0.96	1.07	
FF1ENP031	0.98	1.02	
FF1ENP036	0.98	1.09	
FF1ENP037	0.99	1.03	
FV4BN(B,F)003	0.99	0.99	
FV4BN(B,F)005	1.01	0.97	
FV4BNF002	0.98	0.98	
FV4CN(B,F)003	0.99	0.99	
FV4CN(B,F)005	1.01	0.97	
FV4CNF002	0.98	0.98	
FX4CN(B,F)036	0.99	1.03	
FX4CNF030	0.98	1.02	
FX4DN(B,F)037	1.01	1.01	
FY4ANF030	0.97	1.08	
FY4ANF036	0.97	1.09	
FY5BNF030	0.99	1.03	
FY5BNF036	0.98	1.06	
CAP**3014A**	0.97	1.09	
CAP**3017A**	0.97	1.09	
CAP**3614A**	0.97	1.09	
CAP**3617A**	0.97	1.09	
CAP**3619A**	0.97	1.09	
CAP**3621A**	0.97	1.09	
CNPF*3618A**	0.97	1.09	
CNPH*3017A**	0.97	1.09	
CNPH*3617A**	0.97	1.09	
CNPV*3014A**	0.97	1.09	
CNPV*3017A**	0.97	1.09	
CNPV*3117A**	1.00	1.09	
CNPV*3617A**	0.97	1.09	
CNPV*3621A**	0.97	1.09	

COOLING INDOOR MODEL	CAPACITY	POWER	FURNACE MODEL
CNPV*3717A**	1.01	1.09	
CSPH*3012A**	0.97	1.09	
CSPH*3612A**	0.97	1.09	
CAP**3014A**	0.97	1.01	58CV(A X)070–12
CAP**3614A**	0.97	1.01	58CV(A X)070–12
CNPH*3017A**	0.97	1.01	58CV(A X)070–12
CNPH*3617A**	0.97	1.01	58CV(A X)070–12
CNPV*3014A**	0.97	1.01	58CV(A X)070–12
CSPH*3012A**	0.97	1.01	58CV(A X)070–12
CSPH*3612A**	0.97	1.01	58CV(A X)070–12
CAP**3017A**	0.97	0.97	58CV(A X)090–16
CAP**3617A**	0.97	0.97	58CV(A X)090–16
CNPH*3017A**	0.97	0.97	58CV(A X)090–16
CNPH*3617A**	0.97	0.97	58CV(A X)090–16
CNPV*3017A**	0.97	0.97	58CV(A X)090–16
CNPV*3117A**	0.99	0.99	58CV(A X)090–16
CNPV*3617A**	0.97	0.97	58CV(A X)090–16
CNPV*3717A**	1.01	0.97	58CV(A X)090–16
CSPH*3012A**	0.97	0.97	58CV(A X)090–16
CSPH*3612A**	0.97	0.97	58CV(A X)090–16
CAP**3621A**	0.97	0.97	58CV(A X)110–20
CNPH*3017A**	0.97	0.97	58CV(A X)110–20
CNPH*3617A**	0.97	0.97	58CV(A X)110–20
CNPV*3621A**	0.97	0.97	58CV(A X)110–20
CSPH*3012A**	0.97	0.97	58CV(A X)110–20
CSPH*3612A**	0.97	0.97	58CV(A X)110–20
CNPH*3017A**	0.97	0.97	58CV(A X)135–22
CNPH*3617A**	0.97	0.97	58CV(A X)135–22
CSPH*3012A**	0.97	0.97	58CV(A X)135–22
CSPH*3612A**	0.97	0.97	58CV(A X)135–22
CNPH*3017A**	0.97	0.97	58CV(A X)155–22
CNPH*3617A**	0.97	0.97	58CV(A X)155–22
CSPH*3012A**	0.97	0.97	58CV(A X)155–22
CSPH*3612A**	0.97	0.97	58CV(A X)155–22
CAP**3619A**	0.97	1.01	58HDV040––12
CAP**3619A**	0.97	1.01	58HDV040––12
CAP**3619A**	0.97	1.01	58HDV060––12

COOLING INDOOR MODEL	CAPACITY	POWER	FURNACE MODEL
CAP**3619A**	0.98	1.02	58HDV060––12
CAP**3017A**	0.98	0.98	58ME(B,C)040–12
CAP**3617A**	0.98	0.98	58ME(B,C)040–12
CNPH*3017A**	0.98	0.98	58ME(B,C)040–12
CNPH*3617A**	0.98	0.98	58ME(B,C)040–12
CNPV*3017A**	0.98	0.98	58ME(B,C)040–12
CNPV*3117A**	1.01	0.97	58ME(B,C)040–12
CNPV*3617A**	0.98	0.98	58ME(B,C)040–12
CNPV*3717A**	1.01	0.97	58ME(B,C)040–12
CSPH*3012A**	0.98	0.98	58ME(B,C)040–12
CSPH*3612A**	0.98	0.98	58ME(B,C)040–12
CAP**3017A**	0.98	0.98	58ME(B,C)060–12
CAP**3617A**	0.98	0.98	58ME(B,C)060–12
CNPH*3017A**	0.98	0.98	58ME(B,C)060–12
CNPH*3617A**	0.98	0.98	58ME(B,C)060–12
CNPV*3017A**	0.98	0.98	58ME(B,C)060–12
CNPV*3117A**	1.01	1.01	58ME(B,C)060–12
CNPV*3617A**	0.98	0.98	58ME(B,C)060–12
CNPV*3717A**	1.01	0.97	58ME(B,C)060–12
CSPH*3012A**	0.98	0.98	58ME(B,C)060–12
CSPH*3612A**	0.98	0.98	58ME(B,C)060–12
CAP**3017A**	0.98	0.98	58ME(B,C)080–12
CAP**3617A**	0.98	0.98	58ME(B,C)080–12
CNPH*3017A**	0.98	0.98	58ME(B,C)080–12
CNPH*3617A**	0.98	0.98	58ME(B,C)080–12
CNPV*3017A**	0.98	0.98	58ME(B,C)080–12
CNPV*3117A**	1.01	1.01	58ME(B,C)080–12
CNPV*3617A**	0.98	0.98	58ME(B,C)080–12
CNPV*3717A**	1.02	0.98	58ME(B,C)080–12
CSPH*3012A**	0.98	0.98	58ME(B,C)080–12
CSPH*3612A**	0.98	0.98	58ME(B,C)080–12
CAP**3017A**	0.98	0.98	58ME(B,C)080–16
CAP**3617A**	0.98	0.98	58ME(B,C)080–16
CNPH*3017A**	0.98	0.98	58ME(B,C)080–16
CNPH*3617A**	0.98	0.98	58ME(B,C)080–16
CNPV*3017A**	0.98	0.98	58ME(B,C)080–16
CNPV*3117A**	1.01	1.01	58ME(B,C)080–16

DETAILED COOLING CAPACITIES# CONTINUED

25HBC530A30 Outdoor Section With FX4DNF031 Indoor Section**

COOLING INDOOR MODEL	CAPACITY	POWER	FURNACE MODEL
CNPV*3617A**	0.98	0.98	58ME(B,C)080–16
CNPV*3717A**	1.03	0.99	58ME(B,C)080–16
CSPH*3012A**	0.98	1.02	58ME(B,C)080–16
CSPH*3612A**	0.98	0.98	58ME(B,C)080–16
CAP**3017A**	0.97	0.97	58MV(B,C)060–14
CAP**3617A**	0.97	0.97	58MV(B,C)060–14
CNPH*3017A**	0.97	0.97	58MV(B,C)060–14
CNPH*3617A**	0.97	0.97	58MV(B,C)060–14
CNPV*3017A**	0.97	0.97	58MV(B,C)060–14
CNPV*3117A**	1.00	1.00	58MV(B,C)060–14
CNPV*3617A**	0.97	0.97	58MV(B,C)060–14
CNPV*3717A**	1.01	0.97	58MV(B,C)060–14
CSPH*3012A**	0.97	0.97	58MV(B,C)060–14
CSPH*3612A**	0.97	0.97	58MV(B,C)060–14
CAP**3621A**	0.97	0.97	58MV(B,C)080–14
CNPH*3017A**	0.97	1.01	58MV(B,C)080–14
CNPH*3617A**	0.97	0.97	58MV(B,C)080–14
CNPV*3621A**	0.97	0.97	58MV(B,C)080–14
CNPV*4221A**	0.97	0.97	58MV(B,C)080–14
CSPH*3012A**	0.97	1.01	58MV(B,C)080–14
CSPH*3612A**	0.97	0.97	58MV(B,C)080–14
CAP**3621A**	0.97	0.97	58MV(B,C)080–20
CNPH*3017A**	0.97	1.01	58MV(B,C)080–20
CNPH*3617A**	0.97	0.97	58MV(B,C)080–20
CNPV*3621A**	0.97	0.97	58MV(B,C)080–20
CSPH*3012A**	0.97	1.01	58MV(B,C)080–20
CSPH*3612A**	0.97	0.97	58MV(B,C)080–20
CAP**3621A**	0.97	0.97	58MV(B,C)100–20
CNPH*3017A**	0.97	1.01	58MV(B,C)100–20
CNPH*3617A**	0.97	0.97	58MV(B,C)100–20
CNPV*3621A**	0.97	0.97	58MV(B,C)100–20
CSPH*3012A**	0.97	1.01	58MV(B,C)100–20
CSPH*3612A**	0.97	0.97	58MV(B,C)100–20
CNPH*3017A**	0.97	0.97	58MV(B,C)120–20
CNPH*3617A**	0.97	0.97	58MV(B,C)120–20
CSPH*3012A**	0.97	0.97	58MV(B,C)120–20
CSPH*3612A**	0.97	0.97	58MV(B,C)120–20
CNPH*3017A**	0.97	1.01	58MVB040–14
CNPH*3617A**	0.97	1.01	58MVB040–14
CSPH*3012A**	0.97	1.01	58MVB040–14
CSPH*3612A**	0.97	1.01	58MVB040–14
CAP**3017A**	0.97	1.01	58PH*070–16
CAP**3617A**	0.98	1.02	58PH*070–16
CNPH*3017A**	0.97	1.01	58PH*070–16
CNPH*3617A**	0.97	1.01	58PH*070–16
CNPV*3017A**	0.97	1.01	58PH*070–16
CNPV*3117A**	1.00	1.00	58PH*070–16
CNPV*3617A**	0.97	1.01	58PH*070–16
CNPV*3717A**	1.01	1.01	58PH*070–16
CSPH*3012A**	0.97	1.01	58PH*070–16
CSPH*3612A**	0.98	1.02	58PH*070–16
CAP**3621A**	0.98	0.98	58PH*090–16
CNPH*3017A**	0.97	1.01	58PH*090–16
CNPH*3617A**	0.98	0.98	58PH*090–16
CNPV*3621A**	0.98	0.98	58PH*090–16
CSPH*3012A**	0.97	1.01	58PH*090–16
CSPH*3612A**	0.98	0.98	58PH*090–16
CAP**3017A**	0.97	0.99	59*N*A060V17**14
CAP**3617A**	0.98	1.00	59*N*A060V17**14

COOLING INDOOR MODEL	CAPACITY	POWER	FURNACE MODEL
CAP**3619A**	0.98	1.00	59*N*A060V17**14
CAP**3621A**	0.98	1.00	59*N*A060V17**14
CNPH*3017A**	0.97	0.99	59*N*A060V17**14
CNPH*3117A**	0.99	1.01	59*N*A060V17**14
CNPH*3617A**	0.97	0.99	59*N*A060V17**14
CNPV*3017A**	0.97	0.99	59*N*A060V17**14
CNPV*3117A**	0.99	1.01	59*N*A060V17**14
CNPV*3617A**	0.97	0.99	59*N*A060V17**14
CNPV*3621A**	0.97	0.99	59*N*A060V17**14
CNPV*3717A**	1.01	0.98	59*N*A060V17**14
CSPH*3012A**	0.98	1.00	59*N*A060V17**14
CSPH*3612A**	0.99	1.01	59*N*A060V17**14
CAP**3017A**	0.98	1.00	59*N*A080V17**14
CAP**3617A**	0.98	1.00	59*N*A080V17**14
CAP**3619A**	0.98	1.00	59*N*A080V17**14
CAP**3621A**	0.99	1.00	59*N*A080V17**14
CNPH*3017A**	0.98	1.00	59*N*A080V17**14
CNPH*3117A**	1.00	0.98	59*N*A080V17**14
CNPH*3617A**	0.98	1.00	59*N*A080V17**14
CNPV*3017A**	0.98	1.00	59*N*A080V17**14
CNPV*3117A**	1.00	0.98	59*N*A080V17**14
CNPV*3617A**	0.98	1.00	59*N*A080V17**14
CNPV*3621A**	0.98	1.00	59*N*A080V17**14
CNPV*3717A**	1.01	0.99	59*N*A080V17**14
CSPH*3012A**	0.99	1.00	59*N*A080V17**14
CSPH*3612A**	1.00	0.98	59*N*A080V17**14
CAP**3619A**	0.99	1.00	59*N*A100V21**20
CAP**3621A**	0.99	0.96	59*N*A100V21**20
CNPH*3017A**	0.99	1.00	59*N*A100V21**20
CNPH*3117A**	1.01	0.98	59*N*A100V21**20
CNPH*3617A**	0.99	1.00	59*N*A100V21**20
CNPV*3621A**	0.99	1.00	59*N*A100V21**20
CSPH*3012A**	0.99	1.00	59*N*A100V21**20
CSPH*3612A**	1.01	0.98	59*N*A100V21**20
CNPH*3017A**	0.99	0.96	59*N*A120V24**22
CNPH*3117A**	1.01	0.98	59*N*A120V24**22
CNPH*3617A**	0.99	0.96	59*N*A120V24**22
CSPH*3012A**	0.99	1.00	59*N*A120V24**22
CSPH*3612A**	1.01	0.98	59*N*A120V24**22
CNPH*3117A**	0.99	1.10	59*P5A040E14**10
CNPV*3117A**	0.99	1.10	59*P5A040E14**10
CNPV*3717A**	1.01	1.12	59*P5A040E14**10
CSPH*3612A**	0.99	1.10	59*P5A040E14**10
CAP**3017A**	0.98	1.00	59*P5A060E17**14
CAP**3617A**	0.99	1.00	59*P5A060E17**14
CAP**3619A**	0.99	1.00	59*P5A060E17**14
CAP**3621A**	0.99	1.00	59*P5A060E17**14
CNPH*3017A**	0.98	1.00	59*P5A060E17**14
CNPH*3117A**	1.01	1.02	59*P5A060E17**14
CNPH*3617A**	0.98	1.00	59*P5A060E17**14
CNPV*3017A**	0.98	1.00	59*P5A060E17**14
CNPV*3117A**	1.01	1.02	59*P5A060E17**14
CNPV*3617A**	0.98	1.00	59*P5A060E17**14
CNPV*3621A**	0.98	1.00	59*P5A060E17**14
CNPV*3717A**	1.02	1.00	59*P5A060E17**14
CSPH*3012A**	0.99	1.00	59*P5A060E17**14
CSPH*3612A**	1.01	1.02	59*P5A060E17**14
CAP**3017A**	0.99	1.00	59*P5A080E17**16
CAP**3617A**	0.99	1.01	59*P5A080E17**16

COOLING INDOOR MODEL	CAPACITY	POWER	FURNACE MODEL
CAP**3619A**	0.99	1.01	59*P5A080E17**16
CAP**3621A**	0.99	1.01	59*P5A080E17**16
CNPH*3017A**	0.99	1.00	59*P5A080E17**16
CNPH*3117A**	1.01	0.99	59*P5A080E17**16
CNPH*3617A**	0.99	1.00	59*P5A080E17**16
CNPV*3017A**	0.99	1.00	59*P5A080E17**16
CNPV*3117A**	1.01	0.99	59*P5A080E17**16
CNPV*3617A**	0.99	1.00	59*P5A080E17**16
CNPV*3621A**	0.99	1.01	59*P5A080E17**16
CNPV*3717A**	1.03	1.00	59*P5A080E17**16
CSPH*3012A**	0.99	1.01	59*P5A080E17**16
CSPH*3612A**	1.01	0.99	59*P5A080E17**16

See note on pg. 48

DETAILED COOLING CAPACITIES# CONTINUED

EVAPORATOR AIR		CONDENSER ENTERING AIR TEMPERATURES °F (°C)																	
		75 (23.9)			85 (29.4)			95 (35)			105 (40.6)			115 (46.1)			125 (51.7)		
CFM	EWB °F (°C)	Capacity MBtuh		Total System KW**	Capacity MBtuh		Total System KW**	Capacity MBtuh		Total System KW**	Capacity MBtuh		Total System KW**	Capacity MBtuh		Total System KW**	Capacity MBtuh		Total System KW**
		Total	Sens‡		Total	Sens‡		Total	Sens‡		Total	Sens‡		Total	Sens‡		Total	Sens‡	
25HBC536A**30 Outdoor Section With FX4DNF037 Indoor Section																			
1050	72 (22 2)	41 59	22.07	2 25	39.75	21 35	2.51	37.77	20.58	2.79	35.67	19.78	3.11	33.40	18.93	3.48	30 96	18.02	3 90
	67 (19.4)	37 90	27.12	2 23	36.20	26 38	2.48	34.37	25.60	2.77	32.42	24.78	3.09	30.32	23.91	3.45	28 05	22.97	3 88
	63 (17.2)††	35 22	26.13	2 22	33.62	25 39	2.47	31.90	24.60	2.75	30.07	23.77	3.07	28.09	22.88	3.44	25 96	21.93	3 87
	62 (16.7)	34 53	32.04	2 21	32.97	31 27	2.47	31.31	30.44	2.75	29.55	29 53	3.07	27.74	27.74	3.44	26 04	26.04	3 87
	57 (13 9)	33 22	33.22	2 21	32.01	32 01	2.46	30.68	30.68	2.74	29.25	29 25	3.06	27.70	27.70	3.44	26 00	26.00	3 86
1200	72 (22 2)	42.40	23.16	2 28	40.49	22.43	2.54	38.44	21.66	2 83	36.24	20 84	3.15	33.91	19.98	3.51	31 38	19.05	3 93
	67 (19.4)	38 68	28.89	2 26	36.90	28.13	2.52	35.00	27.34	2 80	32.97	26 50	3.12	30.79	25.60	3.49	28.46	24.65	3 91
	63 (17.2)††	35 97	27.78	2 25	34.30	27 02	2.50	32.52	26.22	2.78	30.61	25 37	3.10	28.56	24.46	3.47	26 36	23.49	3 90
	62 (16.7)	35 34	34.38	2 24	33.74	33 54	2.50	32.07	31.86	2.78	30.45	30.45	3.10	28.80	28.80	3.47	26 99	26.99	3 90
	57 (13 9)	34 65	34.65	2 24	33.35	33 35	2.50	31.93	31.93	2.78	30.41	30.41	3.10	28.76	28.76	3.47	26 96	26.96	3 90
1350	72 (22 2)	43 03	24.20	2 31	41.06	23.46	2.58	38.93	22.68	2 86	36.68	21 85	3.18	34.27	20.98	3.55	31 68	20.04	3 96
	67 (19.4)	39 27	30.57	2 29	37.43	29 81	2.55	35.47	29.00	2 83	33.38	28.14	3.15	31.16	27.22	3.52	28.76	26.23	3 94
	63 (17.2)††	36 55	29.35	2 28	34.82	28 58	2.53	32.98	27.76	2 81	31.02	26 89	3.13	28.92	25.95	3.50	26 67	24.94	3 93
	62 (16.7)	36 05	36.44	2 28	34.51	34 51	2.53	33.01	33.01	2 81	31.41	31.41	3.14	29.67	29.67	3.51	27.77	27.77	3 93
	57 (13 9)	35 84	35.84	2 28	34.46	34.46	2.53	32.97	32.97	2 81	31.37	31 37	3.14	29.63	29.63	3.51	27.74	27.74	3 93

COOLING INDOOR MODEL	CAPACITY	POWER	FURNACE MODEL
*FX4DN(B F)037	1.00	1.00	
FB4CNF036	0.97	1.05	
FB4CNF042	1.00	1.04	
FE4AN(B,F)003	0.97	1.01	
FE4AN(B,F)005	1.01	1.01	
FE4ANB006	1.02	0.98	
FE4ANF002	0.97	1.01	
FF1ENP036	0.97	1.10	
FF1ENP037	0.97	1.08	
FV4BN(B,F)003	0.97	1.01	
FV4BN(B,F)005	1.01	1.01	
FV4BNB006	1.02	0.98	
FV4BNF002	0.97	1.01	
FV4CN(B,F)003	0.97	1.01	
FV4CN(B,F)005	1.01	1.01	
FV4CNB006	1.02	0.98	
FV4CNF002	0.97	1.01	
FX4CN(B,F)036	0.98	1.02	
FX4CN(B,F)042	0.99	1.04	
FX4DN(B,F)043	1.00	1.00	
FY4ANF036	0.97	1.10	
FY4ANF042	0.98	1.12	
FY5BNF036	0.97	1.06	
FY5BNF042	0.99	1.07	
CAP**3614A**	0.95	1.08	
CAP**3617A**	0.97	1.10	
CAP**3619A**	0.97	1.10	
CAP**3621A**	0.97	1.10	
CAP**4221A**	0.97	1.08	
CAP**4224A**	0.97	1.08	
CNPF*3618A**	0.97	1.10	
CNPH*3617A**	0.97	1.10	
CNPH*4221A**	0.97	1.08	
CNPV*3617A**	0.97	1.10	
CNPV*3621A**	0.97	1.10	
CNPV*3717A**	1.01	1.09	
CNPV*4217A**	0.98	1.09	

COOLING INDOOR MODEL	CAPACITY	POWER	FURNACE MODEL
CNPV*4221A**	0.97	1.08	
CNPV*4324A**	1.01	1.09	
CSPH*3612A**	0.97	1.10	
CSPH*4212A**	0.97	1.08	
CAP**3614A**	0.95	1.04	58CV(A X)070–12
CNPH*3617A**	0.95	1.04	58CV(A X)070–12
CNPH*4221A**	0.97	1.01	58CV(A X)070–12
CSPH*3612A**	0.96	1.00	58CV(A X)070–12
CSPH*4212A**	0.97	1.01	58CV(A X)070–12
CAP**3617A**	0.96	1.00	58CV(A X)090–16
CNPH*3617A**	0.96	1.00	58CV(A X)090–16
CNPH*4221A**	0.97	1.01	58CV(A X)090–16
CNPV*3617A**	0.96	1.00	58CV(A X)090–16
CNPV*3717A**	0.99	0.99	58CV(A X)090–16
CNPV*4217A**	0.98	1.02	58CV(A X)090–16
CSPH*3612A**	0.97	1.01	58CV(A X)090–16
CSPH*4212A**	0.97	1.01	58CV(A X)090–16
CAP**3621A**	0.96	1.00	58CV(A X)110–20
CAP**4221A**	0.97	1.01	58CV(A X)110–20
CNPH*3617A**	0.96	1.00	58CV(A X)110–20
CNPH*4221A**	0.97	1.01	58CV(A X)110–20
CNPV*3621A**	0.96	1.00	58CV(A X)110–20
CNPV*4221A**	0.97	1.01	58CV(A X)110–20
CSPH*3612A**	0.97	1.01	58CV(A X)110–20
CSPH*4212A**	0.98	1.02	58CV(A X)110–20
CAP**4224A**	0.97	1.01	58CV(A X)135–22
CNPH*3617A**	0.96	1.00	58CV(A X)135–22
CNPH*4221A**	0.97	1.01	58CV(A X)135–22
CNPV*4324A**	1.00	1.00	58CV(A X)135–22
CSPH*3612A**	0.97	1.01	58CV(A X)135–22
CSPH*4212A**	0.98	1.02	58CV(A X)135–22
CAP**4224A**	0.97	0.97	58CV(A X)155–22
CNPH*3617A**	0.96	1.00	58CV(A X)155–22
CNPH*4221A**	0.97	1.01	58CV(A X)155–22
CNPV*4324A**	1.00	1.00	58CV(A X)155–22
CSPH*3612A**	0.97	1.01	58CV(A X)155–22
CSPH*4212A**	0.98	0.98	58CV(A X)155–22

COOLING INDOOR MODEL	CAPACITY	POWER	FURNACE MODEL
CAP**3619A**	0.95	1.08	58HDV040––12
CAP**3619A**	0.95	1.08	58HDV040––12
CAP**3619A**	0.96	1.04	58HDV060––12
CAP**3619A**	0.96	1.04	58HDV060––12
CAP**4224A**	0.98	1.02	58HDV100––20
CNPV*4324A**	1.02	1.02	58HDV100––20
CAP**3617A**	0.97	1.01	58ME(B,C)040–12
CNPH*3617A**	0.96	1.00	58ME(B,C)040–12
CNPH*4221A**	0.98	1.02	58ME(B,C)040–12
CNPV*3617A**	0.96	1.00	58ME(B,C)040–12
CNPV*3717A**	1.01	1.01	58ME(B,C)040–12
CNPV*4217A**	0.98	1.02	58ME(B,C)040–12
CSPH*3612A**	0.97	1.01	58ME(B,C)040–12
CSPH*4212A**	0.98	1.02	58ME(B,C)040–12
CAP**3617A**	0.97	1.01	58ME(B,C)060–12
CNPH*3617A**	0.97	1.01	58ME(B,C)060–12
CNPH*4221A**	0.98	1.02	58ME(B,C)060–12
CNPV*3617A**	0.97	1.01	58ME(B,C)060–12
CNPV*3717A**	1.01	1.05	58ME(B,C)060–12
CNPV*4217A**	0.98	1.02	58ME(B,C)060–12
CSPH*3612A**	0.97	1.01	58ME(B,C)060–12
CSPH*4212A**	0.98	1.02	58ME(B,C)060–12
CAP**3617A**	0.97	1.01	58ME(B,C)080–12
CNPH*3617A**	0.96	1.00	58ME(B,C)080–12
CNPH*4221A**	0.98	1.02	58ME(B,C)080–12
CNPV*3617A**	0.96	1.00	58ME(B,C)080–12
CNPV*3717A**	1.00	1.04	58ME(B,C)080–12
CNPV*4217A**	0.98	1.02	58ME(B,C)080–12
CSPH*3612A**	0.97	1.01	58ME(B,C)080–12
CSPH*4212A**	0.98	1.02	58ME(B,C)080–12
CAP**3617A**	0.97	1.01	58ME(B,C)080–16
CNPH*3617A**	0.96	1.00	58ME(B,C)080–16
CNPH*4221A**	0.98	1.02	58ME(B,C)080–16
CNPV*3617A**	0.96	1.00	58ME(B,C)080–16
CNPV*3717A**	1.01	1.05	58ME(B,C)080–16
CNPV*4217A**	0.98	1.02	58ME(B,C)080–16
CSPH*3612A**	0.97	1.01	58ME(B,C)080–16

DETAILED COOLING CAPACITIES# CONTINUED

25HBC536A30 Outdoor Section With FX4DNF037 Indoor Section**

COOLING INDOOR MODEL	CAPACITY	POWER	FURNACE MODEL
CSPH*4212A**	0.98	1.02	58ME(B,C)080–16
CAP**3621A**	0.97	1.01	58ME(B,C)100–20
CAP**4221A**	0.98	1.02	58ME(B,C)100–20
CNPH*3617A**	0.96	1.00	58ME(B,C)100–20
CNPH*4221A**	0.97	1.01	58ME(B,C)100–20
CNPV*3621A**	0.96	1.00	58ME(B,C)100–20
CNPV*4221A**	0.97	1.01	58ME(B,C)100–20
CSPH*3612A**	0.97	1.01	58ME(B,C)100–20
CSPH*4212A**	0.98	0.98	58ME(B,C)100–20
CAP**3617A**	0.97	1.01	58MV(B,C)060–14
CNPH*3617A**	0.96	1.00	58MV(B,C)060–14
CNPH*4221A**	0.97	1.01	58MV(B,C)060–14
CNPV*3617A**	0.96	1.00	58MV(B,C)060–14
CNPV*3717A**	1.00	1.00	58MV(B,C)060–14
CNPV*4217A**	0.98	1.02	58MV(B,C)060–14
CSPH*3612A**	0.97	1.01	58MV(B,C)060–14
CSPH*4212A**	0.98	1.02	58MV(B,C)060–14
CAP**3621A**	0.96	1.00	58MV(B,C)080–14
CAP**4221A**	0.97	1.01	58MV(B,C)080–14
CNPH*3617A**	0.95	1.04	58MV(B,C)080–14
CNPH*4221A**	0.97	1.01	58MV(B,C)080–14
CNPV*3621A**	0.95	1.04	58MV(B,C)080–14
CNPV*4221A**	0.97	1.01	58MV(B,C)080–14
CNPV*4324A**	1.00	1.02	58MV(B,C)080–14
CNPV*4821A**	0.98	1.02	58MV(B,C)080–14
CNPV*6024A**	0.99	1.04	58MV(B,C)080–14
CSPH*3612A**	0.96	1.00	58MV(B,C)080–14
CSPH*4212A**	0.97	1.01	58MV(B,C)080–14
CAP**3621A**	0.96	1.00	58MV(B,C)080–20
CAP**4221A**	0.97	1.01	58MV(B,C)080–20
CNPH*3617A**	0.95	1.04	58MV(B,C)080–20
CNPH*4221A**	0.97	1.01	58MV(B,C)080–20
CNPV*3621A**	0.95	0.99	58MV(B,C)080–20
CNPV*4221A**	0.97	1.01	58MV(B,C)080–20
CNPV*4324A**	0.99	0.99	58MV(B,C)080–20
CSPH*3612A**	0.96	1.00	58MV(B,C)080–20
CSPH*4212A**	0.97	1.01	58MV(B,C)080–20
CAP**3621A**	0.97	1.01	58MV(B,C)100–20
CAP**4221A**	0.97	1.01	58MV(B,C)100–20
CNPH*3617A**	0.96	1.00	58MV(B,C)100–20
CNPH*4221A**	0.97	1.01	58MV(B,C)100–20
CNPV*3621A**	0.96	1.00	58MV(B,C)100–20
CNPV*4221A**	0.97	1.01	58MV(B,C)100–20
CSPH*3612A**	0.97	1.01	58MV(B,C)100–20
CSPH*4212A**	0.98	1.02	58MV(B,C)100–20
CAP**4224A**	0.97	1.01	58MV(B,C)120–20
CNPH*3617A**	0.96	1.00	58MV(B,C)120–20
CNPH*4221A**	0.97	1.01	58MV(B,C)120–20
CNPV*4324A**	1.00	1.00	58MV(B,C)120–20
CSPH*3612A**	0.97	1.01	58MV(B,C)120–20
CSPH*4212A**	0.98	1.02	58MV(B,C)120–20
CAP**4224A**	0.97	1.01	58MVB040–14
CNPH*3617A**	0.95	1.04	58MVB040–14
CNPH*4221A**	0.97	1.05	58MVB040–14
CNPV*4324A**	0.99	1.02	58MVB040–14
CSPH*3612A**	0.96	1.04	58MVB040–14
CSPH*4212A**	0.97	1.01	58MVB040–14
CAP**3614A**	0.95	1.08	58PH*045–08
CNPH*3617A**	0.95	1.06	58PH*045–08

COOLING INDOOR MODEL	CAPACITY	POWER	FURNACE MODEL
CNPH*4221A**	0.97	1.08	58PH*045--08
CSPH*3612A**	0.96	1.04	58PH*045--08
CSPH*4212A**	0.97	1.08	58PH*045--08
CAP**3617A**	0.96	1.04	58PH*070--16
CNPH*3617A**	0.95	1.04	58PH*070--16
CNPH*4221A**	0.97	1.05	58PH*070--16
CNPV*3617A**	0.95	1.04	58PH*070--16
CNPV*3717A**	0.99	1.04	58PH*070--16
CNPV*4217A**	0.98	1.02	58PH*070--16
CSPH*3612A**	0.96	1.00	58PH*070--16
CSPH*4212A**	0.97	1.01	58PH*070--16
CAP**3621A**	0.97	1.01	58PH*090--16
CAP**4221A**	0.98	1.02	58PH*090--16
CNPH*3617A**	0.96	1.00	58PH*090--16
CNPH*4221A**	0.98	1.02	58PH*090--16
CNPV*3621A**	0.97	1.01	58PH*090--16
CNPV*4221A**	0.98	1.02	58PH*090--16
CSPH*3612A**	0.97	1.01	58PH*090--16
CSPH*4212A**	0.98	1.02	58PH*090--16
CAP**3621A**	0.98	1.02	58PH*110--20
CAP**4221A**	0.98	1.02	58PH*110--20
CNPH*3617A**	0.97	1.01	58PH*110--20
CNPH*4221A**	0.98	1.02	58PH*110--20
CNPV*3621A**	0.97	1.01	58PH*110--20
CNPV*4221A**	0.98	1.02	58PH*110--20
CSPH*3612A**	0.97	1.01	58PH*110--20
CSPH*4212A**	0.98	1.02	58PH*110--20
CAP**3617A**	0.96	1.02	59*P5A060E17**14
CAP**3619A**	0.96	1.02	59*P5A060E17**14
CAP**3621A**	0.96	1.02	59*P5A060E17**14
CAP**4221A**	0.97	1.02	59*P5A060E17**14
CNPH*3617A**	0.95	1.02	59*P5A060E17**14
CNPH*4221A**	0.97	1.02	59*P5A060E17**14
CNPH*4321A**	1.00	1.02	59*P5A060E17**14
CNPV*3617A**	0.95	1.02	59*P5A060E17**14
CNPV*3621A**	0.95	1.02	59*P5A060E17**14
CNPV*3717A**	0.99	1.01	59*P5A060E17**14
CNPV*4217A**	0.98	1.01	59*P5A060E17**14
CNPV*4221A**	0.97	1.02	59*P5A060E17**14
CSPH*3612A**	0.98	1.02	59*P5A060E17**14
CSPH*4212A**	0.99	1.02	59*P5A060E17**14
CAP**3617A**	0.95	0.99	59*P5A080E17**16
CAP**3619A**	0.95	0.99	59*P5A080E17**16
CAP**3621A**	0.96	0.99	59*P5A080E17**16
CAP**4221A**	0.97	1.00	59*P5A080E17**16
CNPH*3617A**	0.95	0.99	59*P5A080E17**16
CNPH*4221A**	0.97	1.00	59*P5A080E17**16
CNPH*4321A**	0.99	1.01	59*P5A080E17**16
CNPV*3617A**	0.95	0.99	59*P5A080E17**16
CNPV*3621A**	0.95	0.99	59*P5A080E17**16
CNPV*3717A**	0.99	1.01	59*P5A080E17**16
CNPV*4217A**	0.97	0.99	59*P5A080E17**16
CNPV*4221A**	0.97	1.00	59*P5A080E17**16
CSPH*3612A**	0.98	0.99	59*P5A080E17**16
CSPH*4212A**	0.98	1.00	59*P5A080E17**16
CAP**3617A**	0.95	1.01	59*N*A060V17**14
CAP**3619A**	0.95	1.01	59*N*A060V17**14
CAP**3621A**	0.95	0.98	59*N*A060V17**14
CAP**4221A**	0.95	0.99	59*N*A060V17**14

COOLING INDOOR MODEL	CAPACITY	POWER	FURNACE MODEL
CNPH*3617A**	0.94	1.01	59*N*A060V17**14
CNPH*4221A**	0.95	1.01	59*N*A060V17**14
CNPH*4321A**	0.98	1.00	59*N*A060V17**14
CNPV*3617A**	0.94	1.01	59*N*A060V17**14
CNPV*3621A**	0.94	1.01	59*N*A060V17**14
CNPV*3717A**	0.98	1.00	59*N*A060V17**14
CNPV*4217A**	0.96	0.99	59*N*A060V17**14
CNPV*4221A**	0.95	1.01	59*N*A060V17**14
CSPH*3612A**	0.97	1.00	59*N*A060V17**14
CSPH*4212A**	0.97	1.00	59*N*A060V17**14
CAP**3617A**	0.95	0.98	59*N*A080V17**14
CAP**3619A**	0.95	0.98	59*N*A080V17**14
CAP**3621A**	0.95	0.99	59*N*A080V17**14
CAP**4221A**	0.96	0.99	59*N*A080V17**14
CNPH*3617A**	0.95	1.01	59*N*A080V17**14
CNPH*4221A**	0.96	0.99	59*N*A080V17**14
CNPH*4321A**	0.99	1.00	59*N*A080V17**14
CNPV*3617A**	0.95	1.01	59*N*A080V17**14
CNPV*3621A**	0.95	0.98	59*N*A080V17**14
CNPV*3717A**	0.98	1.00	59*N*A080V17**14
CNPV*4217A**	0.97	0.98	59*N*A080V17**14
CNPV*4221A**	0.96	0.99	59*N*A080V17**14
CSPH*3612A**	0.97	0.99	59*N*A080V17**14
CSPH*4212A**	0.98	0.99	59*N*A080V17**14
CAP**3619A**	0.95	0.99	59*N*A100V21**20
CAP**3621A**	0.95	0.99	59*N*A100V21**20
CAP**4221A**	0.97	0.98	59*N*A100V21**20
CAP**4224A**	0.97	0.98	59*N*A100V21**20
CNPH*3617A**	0.95	0.99	59*N*A100V21**20
CNPH*4221A**	0.97	1.00	59*N*A100V21**20
CNPH*4321A**	0.99	1.01	59*N*A100V21**20
CNPV*3621A**	0.95	0.99	59*N*A100V21**20
CNPV*4221A**	0.97	1.00	59*N*A100V21**20
CNPV*4324A**	0.99	0.97	59*N*A100V21**20
CSPH*3612A**	0.98	0.99	59*N*A100V21**20
CSPH*4212A**	0.98	1.00	59*N*A100V21**20
CAP**4224A**	0.97	0.98	59*N*A120V24**22
CNPH*3617A**	0.95	0.99	59*N*A120V24**22
CNPH*4221A**	0.97	0.98	59*N*A120V24**22
CNPH*4321A**	0.99	0.97	59*N*A120V24**22
CNPV*4324A**	0.99	0.97	59*N*A120V24**22
CSPH*3612A**	0.98	0.99	59*N*A120V24**22
CSPH*4212A**	0.98	1.00	59*N*A120V24**22

See note on pg. 48

DETAILED COOLING CAPACITIES# CONTINUED

EVAPORATOR AIR		CONDENSER ENTERING AIR TEMPERATURES °F (°C)																	
		75 (23.9)			85 (29.4)			95 (35)			105 (40.6)			115 (46.1)			125 (51.7)		
CFM	EWB °F (°C)	Capacity MBtuh		Total System KW**	Capacity MBtuh		Total System KW**	Capacity MBtuh		Total System KW**	Capacity MBtuh		Total System KW**	Capacity MBtuh		Total System KW**	Capacity MBtuh		Total System KW**
		Total	Sens‡		Total	Sens‡		Total	Sens‡		Total	Sens‡		Total	Sens‡		Total	Sens‡	
25HBC542A**30 Outdoor Section With FX4DNF043 Indoor Section																			
1225	72 (22 2)	50.43	25.70	2.47	48.01	24.76	2.86	45.51	23.81	3 26	42.89	22 83	3.69	40.16	21.82	4.13	37 25	20.76	4 61
	67 (19.4)	45 65	31.32	2 59	43.47	30 39	2.96	41.22	29.44	3 33	38.86	28.47	3.73	36.38	27.46	4.15	33.74	26.40	4 62
	63 (17.2)††	42 23	30.12	2 67	40.23	29 20	3.01	38.16	28.26	3 36	35.97	27 30	3.74	33.68	26.29	4.16	31 23	25.22	4 61
	62 (16.7)	41 36	36.82	2 68	39.42	35 88	3.02	37.42	34.91	3 37	35.33	33 87	3.75	33.17	32.70	4.16	31 09	31.09	4 61
	57 (13 9)	39 50	39.50	2.72	38.01	38 01	3.04	36.44	36.44	3 38	34.77	34.77	3.75	32.98	32.98	4.16	31 05	31.05	4 61
1400	72 (22 2)	51 53	26.95	2.47	48.98	25 98	2.88	46.35	25.01	3 29	43.62	24 01	3.72	40.76	22.98	4.17	37.75	21.90	4 65
	67 (19.4)	46 66	33.31	2 60	44.38	32 35	2.98	42.00	31.37	3 36	39.54	30 39	3.76	36.95	29.35	4.19	34 21	28.25	4 66
	63 (17.2)††	43.19	31.97	2 69	41.08	31 02	3.04	38.90	30.06	3.40	36.62	29 07	3.78	34.22	28.03	4.20	31 69	26.94	4 66
	62 (16.7)	42 36	39.45	2.70	40.35	38.44	3.05	38.28	37.36	3.40	36.20	36 20	3.78	34.27	34.27	4.20	32 20	32.20	4 66
	57 (13 9)	41 23	41.23	2.72	39.62	39 62	3.06	37.93	37.93	3.41	36.14	36.14	3.78	34.22	34.22	4.20	32.16	32.16	4 66
1575	72 (22 2)	52 37	28.11	2.48	49.72	27.13	2.90	47.00	26.14	3 31	44.15	25.12	3.75	41.21	24.07	4.20	38.11	22.98	4 69
	67 (19.4)	47.45	35.19	2 62	45.05	34 20	3.00	42.59	33.23	3 39	40.05	32 20	3.80	37.37	31.13	4.23	34 58	30.00	4.70
	63 (17.2)††	43 93	33.72	2.71	41.73	32.75	3.07	39.46	31.77	3.43	37.10	30.75	3.82	34.64	29.68	4.24	32 04	28.54	4.70
	62 (16.7)	43 23	41.84	2.72	41.18	40 82	3.07	39.23	39.23	3.43	37.32	37 32	3.82	35.29	35.29	4.24	33.12	33.12	4.70
	57 (13 9)	42 69	42.69	2.73	40.98	40 98	3.08	39.18	39.18	3.44	37.28	37 28	3.82	35.25	35.25	4.24	33 08	33.08	4.70

COOLING INDOOR MODEL	CAPACITY	POWER	FURNACE MODEL
*FX4DN(B F)043	1.00	1.00	
FB4CNF042	1.01	1.01	
FB4CNF048	1.01	1.01	
FE4AN(B,F)003	0.99	1.03	
FE4AN(B,F)005	1.01	0.97	
FE4ANB006	1.01	0.97	
FV4BN(B,F)003	0.99	1.03	
FV4BN(B,F)005	1.01	0.97	
FV4BNB006	1.01	0.97	
FV4CN(B,F)003	0.99	1.03	
FV4CN(B,F)005	1.01	0.97	
FV4CNB006	1.01	0.97	
FX4CN(B,F)042	1.01	1.05	
FX4CN(B,F)048	1.01	1.01	
FX4DN(B,F)049	1.01	0.97	
FY4ANF042	1.00	1.09	
FY4ANF048	1.01	1.10	
FY5BNF042	1.01	1.05	
FY5BNF048	1.01	1.05	
CAP**4221A**	0.99	1.07	
CAP**4224A**	0.99	1.07	
CAP**4817A**	1.01	1.10	
CAP**4821A**	1.01	1.10	
CAP**4823A**	1.01	1.10	
CAP**4824A**	1.01	1.10	
CNPF*4818A**	1.00	1.09	
CNPH*4221A**	0.99	1.07	
CNPH*4821A**	1.01	1.10	
CNPV*4217A**	1.00	1.09	
CNPV*4221A**	0.99	1.07	
CNPV*4324A**	1.01	1.05	
CNPV*4821A**	1.01	1.10	
CNPV*4824A**	1.01	1.10	
CSPH*4212A**	0.99	1.07	
CSPH*4812A**	1.01	1.10	
CNPH*4221A**	0.98	1.03	58CV(A,X)070–12
CNPH*4821A**	1.00	1.04	58CV(A,X)070–12

COOLING INDOOR MODEL	CAPACITY	POWER	FURNACE MODEL
CSPH*4212A**	0.99	1.03	58CV(A X)070–12
CSPH*4812A**	1.00	1.04	58CV(A X)070–12
CAP**4817A**	1.00	1.00	58CV(A X)090–16
CNPH*4221A**	0.99	1.03	58CV(A X)090–16
CNPH*4821A**	1.00	1.04	58CV(A X)090–16
CNPV*4217A**	0.99	1.03	58CV(A X)090–16
CSPH*4212A**	1.00	1.04	58CV(A X)090–16
CSPH*4812A**	1.00	1.00	58CV(A X)090–16
CAP**4221A**	0.99	1.03	58CV(A X)110–20
CAP**4821A**	1.00	1.00	58CV(A X)110–20
CNPH*4221A**	0.99	1.03	58CV(A X)110–20
CNPH*4821A**	1.00	1.00	58CV(A X)110–20
CNPV*4221A**	0.99	1.03	58CV(A X)110–20
CNPV*4324A**	1.01	1.01	58CV(A X)110–20
CNPV*4821A**	1.00	1.00	58CV(A X)110–20
CSPH*4212A**	1.00	1.04	58CV(A X)110–20
CSPH*4812A**	1.00	1.00	58CV(A X)110–20
CAP**4224A**	0.99	0.99	58CV(A X)135–22
CAP**4824A**	1.00	1.00	58CV(A X)135–22
CNPH*4221A**	0.99	1.03	58CV(A X)135–22
CNPH*4821A**	1.00	1.00	58CV(A X)135–22
CNPV*4324A**	1.01	0.97	58CV(A X)135–22
CNPV*4824A**	1.00	1.00	58CV(A X)135–22
CSPH*4212A**	1.00	1.04	58CV(A X)135–22
CSPH*4812A**	1.01	1.01	58CV(A X)135–22
CAP**4224A**	0.99	0.99	58CV(A X)155–22
CAP**4824A**	1.00	1.00	58CV(A X)155–22
CNPH*4221A**	0.99	1.03	58CV(A X)155–22
CNPH*4821A**	1.00	1.00	58CV(A X)155–22
CNPV*4324A**	1.01	0.97	58CV(A X)155–22
CNPV*4824A**	1.00	1.00	58CV(A X)155–22
CSPH*4212A**	1.00	1.04	58CV(A X)155–22
CSPH*4812A**	1.01	1.01	58CV(A X)155–22
CAP**4823A**	1.01	1.05	58HDV080––20
CAP**4224A**	0.99	1.03	58HDV100––20
CAP**4817A**	1.01	1.01	58ME(B,C)040–12
CNPH*4221A**	0.99	1.03	58ME(B,C)040–12

COOLING INDOOR MODEL	CAPACITY	POWER	FURNACE MODEL
CNPH*4821A**	1.01	1.05	58ME(B,C)040–12
CNPV*4217A**	1.00	1.04	58ME(B,C)040–12
CSPH*4212A**	1.00	1.04	58ME(B,C)040–12
CSPH*4812A**	1.01	1.01	58ME(B,C)040–12
CAP**4817A**	1.01	1.01	58ME(B,C)060–12
CNPH*4221A**	0.99	1.03	58ME(B,C)060–12
CNPH*4821A**	1.01	1.05	58ME(B,C)060–12
CNPV*4217A**	1.00	1.04	58ME(B,C)060–12
CSPH*4212A**	1.00	1.04	58ME(B,C)060–12
CSPH*4812A**	1.01	1.01	58ME(B,C)060–12
CAP**4817A**	1.01	1.01	58ME(B,C)080–12
CNPH*4221A**	0.99	1.03	58ME(B,C)080–12
CNPH*4821A**	1.01	1.05	58ME(B,C)080–12
CNPV*4217A**	1.00	1.04	58ME(B,C)080–12
CSPH*4212A**	1.00	1.04	58ME(B,C)080–12
CSPH*4812A**	1.01	1.01	58ME(B,C)080–12
CAP**4817A**	1.01	1.01	58ME(B,C)080–16
CNPH*4221A**	0.99	1.03	58ME(B,C)080–16
CNPH*4821A**	1.00	1.04	58ME(B,C)080–16
CNPV*4217A**	0.99	1.03	58ME(B,C)080–16
CSPH*4212A**	1.00	1.04	58ME(B,C)080–16
CSPH*4812A**	1.01	1.01	58ME(B,C)080–16
CAP**4221A**	0.99	0.99	58ME(B,C)100–20
CAP**4821A**	1.00	1.00	58ME(B,C)100–20
CNPH*4221A**	0.99	1.03	58ME(B,C)100–20
CNPH*4821A**	1.01	1.01	58ME(B,C)100–20
CNPV*4221A**	0.99	1.03	58ME(B,C)100–20
CNPV*4821A**	1.01	1.01	58ME(B,C)100–20
CSPH*4212A**	1.00	1.04	58ME(B,C)100–20
CSPH*4812A**	1.01	1.01	58ME(B,C)100–20
CAP**4224A**	1.00	1.00	58ME(B,C)120–20
CAP**4824A**	1.01	1.01	58ME(B,C)120–20
CNPH*4221A**	0.99	0.99	58ME(B,C)120–20
CNPH*4821A**	1.01	1.01	58ME(B,C)120–20
CNPV*4324A**	1.01	0.97	58ME(B,C)120–20
CNPV*4824A**	1.01	1.01	58ME(B,C)120–20
CSPH*4212A**	1.00	1.00	58ME(B,C)120–20

DETAILED COOLING CAPACITIES# CONTINUED

25HBC542A30 Outdoor Section With FX4DNF043 Indoor Section**

COOLING INDOOR MODEL	CAPACITY	POWER	FURNACE MODEL
CSPH*4812A**	1.01	1.01	58ME(B,C)120–20
CAP**4817A**	1.01	1.01	58MV(B,C)060–14
CNPH*4221A**	0.99	1.03	58MV(B,C)060–14
CNPH*4821A**	1.01	1.01	58MV(B,C)060–14
CNPV*4217A**	1.00	1.04	58MV(B,C)060–14
CSPH*4212A**	1.00	1.04	58MV(B,C)060–14
CSPH*4812A**	1.01	1.01	58MV(B,C)060–14
CAP**4221A**	0.98	1.02	58MV(B,C)080–14
CAP**4821A**	1.00	1.04	58MV(B,C)080–14
CNPH*4221A**	0.98	1.03	58MV(B,C)080–14
CNPH*4821A**	1.00	1.04	58MV(B,C)080–14
CNPV*4221A**	0.98	1.03	58MV(B,C)080–14
CNPV*4821A**	1.00	1.04	58MV(B,C)080–14
CSPH*4212A**	0.99	1.03	58MV(B,C)080–14
CSPH*4812A**	1.00	1.04	58MV(B,C)080–14
CAP**4221A**	0.98	1.02	58MV(B,C)080–20
CAP**4821A**	1.00	1.04	58MV(B,C)080–20
CNPH*4221A**	0.98	1.02	58MV(B,C)080–20
CNPH*4821A**	1.00	1.04	58MV(B,C)080–20
CNPV*4221A**	0.99	1.03	58MV(B,C)080–20
CNPV*4821A**	1.00	1.04	58MV(B,C)080–20
CSPH*4212A**	1.00	1.04	58MV(B,C)080–20
CSPH*4812A**	1.00	1.00	58MV(B,C)080–20
CAP**4221A**	0.98	1.02	58MV(B,C)100–20
CAP**4821A**	0.99	1.03	58MV(B,C)100–20
CNPH*4221A**	0.98	1.02	58MV(B,C)100–20
CNPH*4821A**	1.00	1.04	58MV(B,C)100–20
CNPV*4221A**	0.98	1.02	58MV(B,C)100–20
CNPV*4324A**	1.01	1.01	58MV(B,C)100–20
CNPV*4821A**	1.00	1.04	58MV(B,C)100–20
CSPH*4212A**	0.99	1.03	58MV(B,C)100–20
CSPH*4812A**	1.00	1.04	58MV(B,C)100–20
CAP**4224A**	0.99	1.03	58MV(B,C)120–20
CAP**4824A**	1.00	1.00	58MV(B,C)120–20
CNPH*4221A**	0.99	1.03	58MV(B,C)120–20
CNPH*4821A**	1.00	1.00	58MV(B,C)120–20
CNPV*4324A**	1.01	1.01	58MV(B,C)120–20
CNPV*4824A**	1.00	1.00	58MV(B,C)120–20
CSPH*4212A**	1.00	1.04	58MV(B,C)120–20
CSPH*4812A**	1.00	1.00	58MV(B,C)120–20
CAP**4224A**	0.98	1.02	58MVB040–14
CAP**4824A**	0.99	1.03	58MVB040–14
CNPH*4221A**	0.98	1.02	58MVB040–14
CNPH*4821A**	1.00	1.04	58MVB040–14
CNPV*4324A**	1.01	1.01	58MVB040–14
CNPV*4824A**	1.00	1.04	58MVB040–14
CSPH*4212A**	0.99	1.03	58MVB040–14
CSPH*4812A**	1.00	1.04	58MVB040–14
CAP**4817A**	1.00	1.04	58PH*070–16
CNPH*4221A**	0.98	1.06	58PH*070–16
CNPH*4821A**	1.00	1.04	58PH*070–16
CNPV*4217A**	0.99	1.07	58PH*070–16
CSPH*4212A**	0.99	1.07	58PH*070–16
CSPH*4812A**	1.00	1.04	58PH*070–16
CAP**4221A**	0.99	1.03	58PH*090–16
CAP**4821A**	1.00	1.00	58PH*090–16
CNPH*4221A**	0.99	1.03	58PH*090–16
CNPH*4821A**	1.01	1.01	58PH*090–16
CNPV*4221A**	0.99	1.03	58PH*090–16

COOLING INDOOR MODEL	CAPACITY	POWER	FURNACE MODEL
CNPV*4821A**	1.01	1.01	58PH*090--16
CSPH*4212A**	1.00	1.04	58PH*090--16
CSPH*4812A**	1.01	1.01	58PH*090--16
CAP**4221A**	0.99	0.99	58PH*110--20
CAP**4821A**	1.00	1.00	58PH*110--20
CNPH*4221A**	0.99	1.03	58PH*110--20
CNPH*4821A**	1.01	1.01	58PH*110--20
CNPV*4221A**	0.99	1.03	58PH*110--20
CNPV*4324A**	1.01	0.97	58PH*110--20
CNPV*4821A**	1.01	1.01	58PH*110--20
CSPH*4212A**	1.00	1.04	58PH*110--20
CSPH*4812A**	1.01	1.01	58PH*110--20
CAP**4224A**	0.99	1.03	58PH*135--20
CAP**4824A**	1.01	1.01	58PH*135--20
CNPH*4221A**	0.99	1.03	58PH*135--20
CNPH*4821A**	1.01	1.01	58PH*135--20
CNPV*4324A**	1.01	0.97	58PH*135--20
CNPV*4824A**	1.01	1.01	58PH*135--20
CSPH*4212A**	1.00	1.04	58PH*135--20
CSPH*4812A**	1.01	1.01	58PH*135--20
CAP**4221A**	0.95	1.02	59*N*A060V17**14
CAP**4817A**	0.98	1.01	59*N*A060V17**14
CAP**4821A**	0.98	1.01	59*N*A060V17**14
CNPH*4221A**	0.95	1.02	59*N*A060V17**14
CNPH*4321A**	0.99	1.00	59*N*A060V17**14
CNPH*4821A**	0.98	1.01	59*N*A060V17**14
CNPV*4217A**	0.96	1.02	59*N*A060V17**14
CNPV*4221A**	0.95	1.02	59*N*A060V17**14
CNPV*4821A**	0.98	1.01	59*N*A060V17**14
CSPH*4212A**	0.98	1.01	59*N*A060V17**14
CSPH*4812A**	0.98	1.01	59*N*A060V17**14
CAP**4221A**	0.96	1.00	59*N*A080V17**14
CAP**4817A**	0.99	1.00	59*N*A080V17**14
CAP**4821A**	0.98	1.01	59*N*A080V17**14
CNPH*4221A**	0.96	1.02	59*N*A080V17**14
CNPH*4321A**	0.99	1.00	59*N*A080V17**14
CNPH*4821A**	0.98	0.99	59*N*A080V17**14
CNPV*4217A**	0.96	1.00	59*N*A080V17**14
CNPV*4221A**	0.96	1.02	59*N*A080V17**14
CNPV*4821A**	0.98	0.99	59*N*A080V17**14
CSPH*4212A**	0.98	0.99	59*N*A080V17**14
CSPH*4812A**	0.99	1.00	59*N*A080V17**14
CAP**4221A**	0.96	1.00	59*N*A100V21**20
CAP**4224A**	0.96	1.00	59*N*A100V21**20
CAP**4821A**	0.98	0.99	59*N*A100V21**20
CAP**4823A**	0.98	0.99	59*N*A100V21**20
CAP**4824A**	0.98	0.99	59*N*A100V21**20
CNPH*4221A**	0.96	1.00	59*N*A100V21**20
CNPH*4321A**	1.00	0.98	59*N*A100V21**20
CNPH*4821A**	0.99	1.00	59*N*A100V21**20
CNPV*4221A**	0.96	1.00	59*N*A100V21**20
CNPV*4324A**	1.00	0.98	59*N*A100V21**20
CNPV*4821A**	0.99	1.00	59*N*A100V21**20
CNPV*4824A**	0.99	1.00	59*N*A100V21**20
CSPH*4212A**	0.99	1.00	59*N*A100V21**20
CSPH*4812A**	0.99	1.00	59*N*A100V21**20
CAP**4224A**	0.96	0.98	59*N*A120V24**22
CAP**4823A**	0.98	0.99	59*N*A120V24**22
CAP**4824A**	0.98	0.99	59*N*A120V24**22

COOLING INDOOR MODEL	CAPACITY	POWER	FURNACE MODEL
CNPH*4221A**	0.96	0.98	59*N*A120V24**22
CNPH*4321A**	1.00	0.98	59*N*A120V24**22
CNPH*4821A**	0.99	0.96	59*N*A120V24**22
CNPV*4324A**	1.00	0.98	59*N*A120V24**22
CNPV*4824A**	0.99	0.96	59*N*A120V24**22
CSPH*4212A**	0.99	0.96	59*N*A120V24**22
CSPH*4812A**	0.99	0.96	59*N*A120V24**22
CAP**4221A**	0.96	1.02	59*P5A060E17**14
CAP**4817A**	0.99	1.02	59*P5A060E17**14
CAP**4821A**	0.99	1.02	59*P5A060E17**14
CNPH*4221A**	0.96	1.03	59*P5A060E17**14
CNPH*4321A**	1.00	1.02	59*P5A060E17**14
CNPH*4821A**	0.99	1.02	59*P5A060E17**14
CNPV*4217A**	0.98	1.04	59*P5A060E17**14
CNPV*4221A**	0.96	1.03	59*P5A060E17**14
CNPV*4821A**	0.99	1.02	59*P5A060E17**14
CSPH*4212A**	0.99	1.02	59*P5A060E17**14
CSPH*4812A**	0.99	1.00	59*P5A060E17**14
CAP**4221A**	0.98	1.01	59*P5A080E17**16
CAP**4817A**	1.00	1.02	59*P5A080E17**16
CAP**4821A**	0.99	1.02	59*P5A080E17**16
CNPH*4221A**	0.98	1.04	59*P5A080E17**16
CNPH*4321A**	1.00	1.02	59*P5A080E17**16
CNPH*4821A**	0.99	1.00	59*P5A080E17**16
CNPV*4217A**	0.98	1.01	59*P5A080E17**16
CNPV*4221A**	0.98	1.04	59*P5A080E17**16
CNPV*4821A**	0.99	1.00	59*P5A080E17**16
CSPH*4212A**	1.00	1.02	59*P5A080E17**16
CSPH*4812A**	1.00	1.02	59*P5A080E17**16
CAP**4221A**	0.96	1.00	59*P5A100E21**16
CAP**4224A**	0.96	1.00	59*P5A100E21**16
CAP**4821A**	0.98	0.99	59*P5A100E21**16
CAP**4823A**	0.98	0.99	59*P5A100E21**16
CAP**4824A**	0.99	1.00	59*P5A100E21**16
CNPH*4221A**	0.96	1.00	59*P5A100E21**16
CNPH*4321A**	1.00	0.98	59*P5A100E21**16
CNPH*4821A**	0.99	1.00	59*P5A100E21**16
CNPV*4221A**	0.96	1.00	59*P5A100E21**16
CNPV*4324A**	1.00	0.98	59*P5A100E21**16
CNPV*4821A**	0.99	1.00	59*P5A100E21**16
CNPV*4824A**	0.99	1.00	59*P5A100E21**16
CSPH*4212A**	0.99	1.00	59*P5A100E21**16
CSPH*4812A**	0.99	1.00	59*P5A100E21**16
CAP**4224A**	0.99	1.00	59*P5A120E24**22
CAP**4823A**	1.00	1.02	59*P5A120E24**22
CAP**4824A**	1.00	0.98	59*P5A120E24**22
CNPH*4221A**	0.98	0.99	59*P5A120E24**22
CNPH*4321A**	1.00	0.98	59*P5A120E24**22
CNPH*4821A**	1.00	0.98	59*P5A120E24**22
CNPV*4324A**	1.00	0.96	59*P5A120E24**22
CNPV*4824A**	1.00	0.98	59*P5A120E24**22
CSPH*4212A**	1.00	0.98	59*P5A120E24**22
CSPH*4812A**	1.00	0.98	59*P5A120E24**22

See note on pg. 48

DETAILED COOLING CAPACITIES# CONTINUED

EVAPORATOR AIR		CONDENSER ENTERING AIR TEMPERATURES °F (°C)																	
		75 (23.9)			85 (29.4)			95 (35)			105 (40.6)			115 (46.1)			125 (51.7)		
CFM	EWB °F (°C)	Capacity MBtuh		Total System KW**	Capacity MBtuh		Total System KW**	Capacity MBtuh		Total System KW**	Capacity MBtuh		Total System KW**	Capacity MBtuh		Total System KW**	Capacity MBtuh		Total System KW**
		Total	Sens‡		Total	Sens‡		Total	Sens‡		Total	Sens‡		Total	Sens‡		Total	Sens‡	
25HBC548A**30 Outdoor Section With FX4DNF049 Indoor Section																			
1400	72 (22 2)	57.01	29.54	2 89	54.18	28.44	3.33	51.32	27.34	3.75	48.40	26.24	4.19	45.36	25.11	4.66	42.16	23.93	5.18
	67 (19.4)	51.80	36.19	2 93	49.25	35 09	3.33	46.66	33.99	3.74	44 00	32.89	4.16	41.24	31.75	4.62	38.29	30.55	5.14
	63 (17 2)††	48.03	34.83	2 94	45.68	33.75	3.33	43.28	32.66	3.73	40 82	31.56	4.14	38.24	30.42	4.60	35.50	29.21	5.12
	62 (16.7)	47.07	42.67	2 95	44.77	41 56	3.33	42.47	40.43	3.72	40.10	39.24	4.13	37.67	37.67	4.59	35.46	35.46	5.12
	57 (13 9)	45.11	45.11	2 96	43.35	43 35	3.33	41.52	41.52	3.72	39 62	39.62	4.13	37.60	37.60	4.59	35.41	35.41	5.12
1600	72 (22 2)	58.19	30.99	2 93	55.20	29 86	3.37	52.22	28.73	3 80	49.16	27.61	4.24	46.01	26.47	4.71	42.69	25.27	5.23
	67 (19.4)	52.92	38.52	2 97	50.21	37 39	3.38	47.50	36.26	3.79	44.73	35.13	4.22	41.84	33.97	4.68	38.81	32.75	5.20
	63 (17 2)††	49.09	37.01	2 99	46.60	35 89	3.38	44.10	34.77	3.78	41 52	33.65	4.19	38.85	32.48	4.65	36.02	31.24	5.17
	62 (16.7)	48.18	45.78	2 99	45.81	44 58	3.38	43.44	43.29	3.78	41 21	41.21	4.19	39.05	39.05	4.65	36.72	36.72	5.18
	57 (13 9)	47.07	47.07	2 99	45.16	45.16	3.38	43.19	43.19	3.77	41.16	41.16	4.19	39.00	39.00	4.65	36.67	36.67	5.18
1800	72 (22 2)	59.07	32.35	2 97	55.98	31 20	3.42	52.88	30.05	3 85	49.73	28.92	4.30	46.49	27.76	4.77	43.06	26.55	5.29
	67 (19.4)	53.74	40.74	3 01	50.94	39 59	3.43	48.12	38.45	3 84	45 26	37.27	4.27	42.30	36.08	4.73	39.19	34.81	5.25
	63 (17 2)††	49.89	39.08	3 03	47.31	37 94	3.43	44.71	36.78	3 83	42 06	35.63	4.25	39.30	34.43	4.71	36.40	33.14	5.22
	62 (16.7)	49.14	48.58	3 03	46.76	46.76	3.43	44.65	44.65	3 83	42.49	42.49	4.25	40.19	40.19	4.71	37.73	37.73	5.24
	57 (13 9)	48.72	48.72	3 03	46.68	46 68	3.43	44.59	44.59	3 83	42.43	42.43	4.25	40.15	40.15	4.71	37.69	37.69	5.24

COOLING INDOOR MODEL	CAPACITY	POWER	FURNACE MODEL
*FX4DN(B F)049	1.00	1.00	
FB4CNF048	0.97	1.05	
FB4CNF060	0.99	1.03	
FE4AN(B,F)005	0.98	0.98	
FE4ANB006	0.99	0.99	
FV4BN(B,F)005	0.98	0.98	
FV4BNB006	0.99	0.99	
FV4CN(B,F)005	0.98	0.98	
FV4CNB006	0.99	0.99	
FX4CN(B,F)048	0.99	1.03	
FX4CN(B,F)060	1.00	1.00	
FX4DN(B,F)061	1.01	1.01	
FY4ANB060	0.99	1.08	
FY4ANF048	0.97	1.08	
FY5BNB060	0.99	1.08	
FY5BNF048	0.98	1.02	
CAP**4817A**	0.95	1.03	
CAP**4821A**	0.96	1.04	
CAP**4823A**	0.96	1.04	
CAP**4824A**	0.96	1.04	
CAP**6021A**	0.98	1.06	
CAP**6024A**	0.98	1.06	
CAP**6025A**	0.98	1.06	
CNPF*4818A**	0.94	1.02	
CNPH*4821A**	0.96	1.04	
CNPH*6024A**	0.98	1.06	
CNPH*6124A**	0.99	1.08	
CNPV*4821A**	0.96	1.04	
CNPV*4824A**	0.96	1.04	
CNPV*6024A**	0.98	1.06	
CNPV*6124A**	0.99	1.08	
CSPH*4812A**	0.96	1.04	
CSPH*6012A**	0.98	1.06	
CAP**4817A**	0.96	1.04	58CV(A,X)090–16
CNPH*4821A**	0.95	0.99	58CV(A,X)090–16
CNPH*6024A**	0.97	1.01	58CV(A,X)090–16
CNPH*6124A**	0.97	1.01	58CV(A,X)090–16

COOLING INDOOR MODEL	CAPACITY	POWER	FURNACE MODEL
CSPH*4812A**	0.96	1.00	58CV(A X)090–16
CSPH*6012A**	0.98	1.02	58CV(A X)090–16
CAP**4821A**	0.95	1.03	58CV(A X)110–20
CAP**6021A**	0.97	1.01	58CV(A X)110–20
CNPH*4821A**	0.96	1.00	58CV(A X)110–20
CNPH*6024A**	0.97	1.01	58CV(A X)110–20
CNPH*6124A**	0.98	1.02	58CV(A X)110–20
CNPV*4821A**	0.96	1.00	58CV(A X)110–20
CNPV*6124A**	0.98	1.00	58CV(A X)110–20
CSPH*4812A**	0.96	1.00	58CV(A X)110–20
CSPH*6012A**	0.98	1.02	58CV(A X)110–20
CAP**4824A**	0.96	1.00	58CV(A X)135–22
CAP**6024A**	0.97	1.01	58CV(A X)135–22
CNPH*4821A**	0.96	1.00	58CV(A X)135–22
CNPH*6024A**	0.97	0.97	58CV(A X)135–22
CNPH*6124A**	0.98	0.98	58CV(A X)135–22
CNPV*4824A**	0.96	1.00	58CV(A X)135–22
CNPV*6024A**	0.97	0.97	58CV(A X)135–22
CNPV*6124A**	0.99	0.99	58CV(A X)135–22
CSPH*4812A**	0.97	1.01	58CV(A X)135–22
CSPH*6012A**	0.98	0.98	58CV(A X)135–22
CAP**4824A**	0.96	1.00	58CV(A X)155–22
CAP**6024A**	0.98	0.98	58CV(A X)155–22
CNPH*4821A**	0.96	1.00	58CV(A X)155–22
CNPH*6024A**	0.98	0.98	58CV(A X)155–22
CNPH*6124A**	0.98	0.98	58CV(A X)155–22
CNPV*4824A**	0.96	1.00	58CV(A X)155–22
CNPV*6024A**	0.98	0.98	58CV(A X)155–22
CNPV*6124A**	0.99	0.99	58CV(A X)155–22
CSPH*4812A**	0.97	1.01	58CV(A X)155–22
CSPH*6012A**	0.98	0.98	58CV(A X)155–22
CAP**4823A**	0.96	1.04	58HDV080––20
CAP**6025A**	0.98	1.02	58HDV100––20
CAP**4817A**	0.96	1.04	58ME(B,C)080–16
CNPH*4821A**	0.96	1.04	58ME(B,C)080–16
CNPH*6024A**	0.98	1.02	58ME(B,C)080–16
CNPH*6124A**	0.98	1.02	58ME(B,C)080–16

COOLING INDOOR MODEL	CAPACITY	POWER	FURNACE MODEL
CSPH*4812A**	0.97	1.05	58ME(B,C)080–16
CSPH*6012A**	0.98	1.02	58ME(B,C)080–16
CAP**4821A**	0.96	1.00	58ME(B,C)100–20
CAP**6021A**	0.98	1.02	58ME(B,C)100–20
CNPH*4821A**	0.96	1.00	58ME(B,C)100–20
CNPH*6024A**	0.98	1.02	58ME(B,C)100–20
CNPH*6124A**	0.98	1.02	58ME(B,C)100–20
CNPV*4821A**	0.96	1.00	58ME(B,C)100–20
CSPH*4812A**	0.97	1.01	58ME(B,C)100–20
CSPH*6012A**	0.99	1.03	58ME(B,C)100–20
CAP**4824A**	0.96	1.00	58ME(B,C)120–20
CAP**6024A**	0.98	1.02	58ME(B,C)120–20
CNPH*4821A**	0.97	1.01	58ME(B,C)120–20
CNPH*6024A**	0.98	1.02	58ME(B,C)120–20
CNPH*6124A**	0.99	0.99	58ME(B,C)120–20
CNPV*4824A**	0.97	1.01	58ME(B,C)120–20
CNPV*6024A**	0.98	1.02	58ME(B,C)120–20
CNPV*6124A**	0.99	0.99	58ME(B,C)120–20
CSPH*4812A**	0.97	1.01	58ME(B,C)120–20
CSPH*6012A**	0.99	0.99	58ME(B,C)120–20
CAP**4821A**	0.94	1.02	58MV(B,C)080–20
CAP**6021A**	0.96	1.00	58MV(B,C)080–20
CNPH*4821A**	0.95	1.03	58MV(B,C)080–20
CNPH*6024A**	0.96	1.00	58MV(B,C)080–20
CNPH*6124A**	0.97	1.01	58MV(B,C)080–20
CNPV*4821A**	0.95	1.03	58MV(B,C)080–20
CSPH*4812A**	0.96	1.04	58MV(B,C)080–20
CSPH*6012A**	0.97	1.01	58MV(B,C)080–20
CAP**4821A**	0.95	1.03	58MV(B,C)100–20
CAP**6021A**	0.97	1.01	58MV(B,C)100–20
CNPH*4821A**	0.96	1.04	58MV(B,C)100–20
CNPH*6024A**	0.97	1.01	58MV(B,C)100–20
CNPH*6124A**	0.98	1.02	58MV(B,C)100–20
CNPV*4821A**	0.96	1.04	58MV(B,C)100–20
CNPV*6124A**	0.98	1.02	58MV(B,C)100–20
CSPH*4812A**	0.96	1.04	58MV(B,C)100–20
CSPH*6012A**	0.98	1.02	58MV(B,C)100–20

DETAILED COOLING CAPACITIES# CONTINUED

25HBC548A30 Outdoor Section With FX4DNF049 Indoor Section**

COOLING INDOOR MODEL	CAPACITY	POWER	FURNACE MODEL
CAP**4824A**	0.95	0.99	58MV(B,C)120–20
CAP**6024A**	0.97	1.01	58MV(B,C)120–20
CNPH*4821A**	0.96	1.00	58MV(B,C)120–20
CNPH*6024A**	0.97	1.01	58MV(B,C)120–20
CNPH*6124A**	0.98	1.02	58MV(B,C)120–20
CNPV*4824A**	0.96	1.00	58MV(B,C)120–20
CNPV*6024A**	0.97	1.01	58MV(B,C)120–20
CNPV*6124A**	0.98	1.02	58MV(B,C)120–20
CSPH*4812A**	0.96	1.00	58MV(B,C)120–20
CSPH*6012A**	0.98	1.02	58MV(B,C)120–20
CAP**4821A**	0.96	1.00	58PH*090–16
CAP**6021A**	0.98	1.02	58PH*090–16
CNPH*4821A**	0.96	1.00	58PH*090–16
CNPH*6024A**	0.98	1.02	58PH*090–16
CNPH*6124A**	0.98	1.02	58PH*090–16
CNPV*4821A**	0.96	1.00	58PH*090–16
CSPH*4812A**	0.97	1.01	58PH*090–16
CSPH*6012A**	0.98	1.02	58PH*090–16
CAP**4821A**	0.95	0.99	58PH*110–20
CAP**6021A**	0.98	0.98	58PH*110–20
CNPH*4821A**	0.96	1.00	58PH*110–20
CNPH*6024A**	0.98	0.98	58PH*110–20
CNPH*6124A**	0.98	0.98	58PH*110–20
CNPV*4821A**	0.96	1.00	58PH*110–20
CSPH*4812A**	0.97	1.01	58PH*110–20
CSPH*6012A**	0.98	0.98	58PH*110–20
CAP**4824A**	0.96	1.00	58PH*135–20
CAP**6024A**	0.98	1.02	58PH*135–20
CNPH*4821A**	0.96	1.00	58PH*135–20
CNPH*6024A**	0.98	1.02	58PH*135–20
CNPH*6124A**	0.98	1.02	58PH*135–20
CNPV*4824A**	0.96	1.00	58PH*135–20
CNPV*6024A**	0.98	1.02	58PH*135–20
CNPV*6124A**	0.99	0.99	58PH*135–20
CSPH*4812A**	0.96	1.00	58PH*135–20
CSPH*6012A**	0.98	1.02	58PH*135–20
CAP**4821A**	0.95	1.00	59*N*A100V21**20
CAP**4823A**	0.95	1.00	59*N*A100V21**20
CAP**4824A**	0.96	1.02	59*N*A100V21**20
CAP**6021A**	0.97	1.00	59*N*A100V21**20
CAP**6024A**	0.97	1.00	59*N*A100V21**20
CAP**6025A**	0.97	1.00	59*N*A100V21**20
CNPH*4821A**	0.96	1.02	59*N*A100V21**20
CNPH*6024A**	0.97	1.00	59*N*A100V21**20
CNPH*6124A**	0.98	1.01	59*N*A100V21**20
CNPV*4821A**	0.96	1.02	59*N*A100V21**20
CNPV*4824A**	0.96	1.02	59*N*A100V21**20
CNPV*6024A**	0.97	1.00	59*N*A100V21**20
CNPV*6124A**	0.99	1.01	59*N*A100V21**20
CSPH*4812A**	0.97	1.03	59*N*A100V21**20
CSPH*6012A**	0.98	1.00	59*N*A100V21**20
CAP**4823A**	0.96	0.99	59*N*A120V24**22
CAP**4824A**	0.96	0.99	59*N*A120V24**22
CAP**6024A**	0.98	1.00	59*N*A120V24**22
CAP**6025A**	0.98	1.00	59*N*A120V24**22
CNPH*4821A**	0.96	0.99	59*N*A120V24**22
CNPH*6024A**	0.98	1.00	59*N*A120V24**22
CNPH*6124A**	0.98	1.00	59*N*A120V24**22
CNPV*4824A**	0.96	0.99	59*N*A120V24**22

COOLING INDOOR MODEL	CAPACITY	POWER	FURNACE MODEL
CNPV*6024A**	0.98	1.00	59*N*A120V24**22
CNPV*6124A**	0.99	0.97	59*N*A120V24**22
CSPH*4812A**	0.97	1.00	59*N*A120V24**22
CSPH*6012A**	0.98	1.00	59*N*A120V24**22
CAP**4817A**	0.96	1.02	59*P5A080E17**16
CAP**4821A**	0.96	1.04	59*P5A080E17**16
CAP**6021A**	0.98	1.05	59*P5A080E17**16
CNPH*4821A**	0.96	1.02	59*P5A080E17**16
CNPH*6024A**	0.98	1.04	59*P5A080E17**16
CNPH*6124A**	0.98	1.04	59*P5A080E17**16
CNPV*4821A**	0.96	1.02	59*P5A080E17**16
CSPH*4812A**	0.97	1.04	59*P5A080E17**16
CSPH*6012A**	0.98	1.04	59*P5A080E17**16
CAP**4821A**	0.96	1.02	59*P5A100E21**16
CAP**4823A**	0.96	1.02	59*P5A100E21**16
CAP**4824A**	0.96	1.02	59*P5A100E21**16
CAP**6021A**	0.98	1.01	59*P5A100E21**16
CAP**6024A**	0.98	1.01	59*P5A100E21**16
CAP**6025A**	0.98	1.01	59*P5A100E21**16
CNPH*4821A**	0.96	1.02	59*P5A100E21**16
CNPH*6024A**	0.98	1.01	59*P5A100E21**16
CNPH*6124A**	0.98	1.01	59*P5A100E21**16
CNPV*4821A**	0.96	1.02	59*P5A100E21**16
CNPV*4824A**	0.96	1.02	59*P5A100E21**16
CNPV*6024A**	0.98	1.01	59*P5A100E21**16
CNPV*6124A**	0.99	1.01	59*P5A100E21**16
CSPH*4812A**	0.97	1.03	59*P5A100E21**16
CSPH*6012A**	0.99	1.02	59*P5A100E21**16
CAP**4823A**	0.96	0.99	59*P5A120E24**22
CAP**4824A**	0.97	1.00	59*P5A120E24**22
CAP**6024A**	0.99	1.01	59*P5A120E24**22
CAP**6025A**	0.99	1.01	59*P5A120E24**22
CNPH*4821A**	0.97	1.00	59*P5A120E24**22
CNPH*6024A**	0.99	1.01	59*P5A120E24**22
CNPH*6124A**	0.99	1.01	59*P5A120E24**22
CNPV*4824A**	0.97	1.00	59*P5A120E24**22
CNPV*6024A**	0.99	1.01	59*P5A120E24**22
CNPV*6124A**	1.00	1.02	59*P5A120E24**22
CSPH*4812A**	0.98	1.01	59*P5A120E24**22
CSPH*6012A**	0.99	1.01	59*P5A120E24**22

See note on pg. 48

DETAILED COOLING CAPACITIES# CONTINUED

EVAPORATOR AIR		CONDENSER ENTERING AIR TEMPERATURES °F (°C)																	
		75 (23.9)			85 (29.4)			95 (35)			105 (40.6)			115 (46.1)			125 (51.7)		
CFM	EWB °F (°C)	Capacity MBtuh		Total System KW**	Capacity MBtuh		Total System KW**	Capacity MBtuh		Total System KW**	Capacity MBtuh		Total System KW**	Capacity MBtuh		Total System KW**	Capacity MBtuh		Total System KW**
		Total	Sens‡		Total	Sens‡		Total	Sens‡		Total	Sens‡		Total	Sens‡		Total	Sens‡	
25HBC560A**30 Outdoor Section With FX4DNF061 Indoor Section																			
1750	72 (22.2)	69.17	35.96	3.81	65.83	34.68	4.20	62.32	33 37	4.63	58 60	31.99	5.12	54.63	30.54	5 68	50.41	29.02	6.30
	67 (19.4)	63.19	44.51	3.74	60.19	43.24	4.13	57.00	41 92	4.56	53 63	40.55	5.05	50.02	39.09	5 61	46.18	37.54	6.25
	63 (17 2)††	58 86	42.93	3.69	56.08	41.67	4.08	53.14	40 35	4.51	50 02	38.98	5.00	46.68	37.53	5 56	43.12	35.99	6.21
	62 (16.7)	57.71	52.83	3.68	55.03	51.53	4.07	52.20	50.14	4.50	49 23	48.59	4.99	46.32	46.32	5 56	43.40	43.40	6.21
	57 (13.9)	55.78	55.78	3.66	53.67	53.67	4.05	51.40	51.40	4.49	48 93	48.93	4.99	46.26	46.26	5 56	43.34	43.34	6.21
2000	72 (22.2)	70 36	37.71	3.89	66.90	36.42	4.28	63.21	35 07	4.71	59 35	33.67	5.20	55.24	32.20	5.75	50.87	30.66	6.38
	67 (19.4)	64 35	47.38	3.82	61.20	46.09	4.21	57.88	44.75	4.64	54 36	43.33	5.13	50.63	41.84	5 69	46.66	40.25	6.32
	63 (17 2)††	59 99	45.61	3.77	57.09	44.32	4.15	54.01	42 98	4.59	50.76	41.57	5.08	47.31	40.08	5 64	43.61	38.48	6.28
	62 (16.7)	58 97	56.64	3.76	56.19	55.19	4.15	53.39	53 39	4.58	50.73	50.73	5.08	47.86	47.86	5 65	44.74	44.74	6.30
	57 (13.9)	58 06	58.06	3.75	55.76	55.76	4.14	53.31	53 31	4.58	50 67	50.67	5.08	47.80	47.80	5 65	44.69	44.69	6.29
2250	72 (22.2)	71 26	39.37	3.97	67.65	38.06	4.36	63.86	36.70	4.79	59 89	35.28	5.27	55.65	33.79	5 82	51.19	32.24	6.45
	67 (19.4)	65 22	50.14	3.89	61.95	48.81	4.28	58.50	47.43	4.71	54 89	45.99	5.20	51.06	44.45	5.76	47.00	42.79	6.39
	63 (17 2)††	60 84	48.17	3.84	57.83	46.84	4.23	54.65	45.48	4.66	51 31	44.03	5.15	47.75	42.48	5.71	43.99	40.82	6.35
	62 (16.7)	60 05	60.05	3.84	57.56	57.56	4.23	54.95	54 95	4.67	52.14	52.14	5.16	49.11	49.11	5.73	45.81	45.81	6.38
	57 (13.9)	59 92	59.92	3.84	57.48	57.48	4.23	54.88	54 88	4.67	52 08	52.08	5.16	49.05	49.05	5.73	45.76	45.76	6.38

COOLING INDOOR MODEL	CAPACITY	POWER	FURNACE MODEL
*FX4DN(B F)061	1.00	1.00	
FB4CNF060	0.97	1.06	
FE4ANB006	0.99	0.99	
FV4BNB006	0.99	0.99	
FV4CNB006	0.99	0.99	
FX4CN(B,F)060	0.99	1.03	
FY4ANB060	0.98	1.07	
FY5BNB060	0.98	1.07	
CAP**6021A**	0.97	1.06	
CAP**6024A**	0.97	1.06	
CAP**6025A**	0.97	1.06	
CNPH*6024A**	0.97	1.06	
CNPH*6124A**	0.98	1.07	
CNPV*6024A**	0.97	1.06	
CNPV*6124A**	0.99	1.08	
CSPH*6012A**	0.97	1.06	
CAP**6021A**	0.97	1.06	58CV(A,X)110–20
CNPH*6024A**	0.97	1.06	58CV(A,X)110–20
CNPH*6124A**	0.98	1.07	58CV(A,X)110–20
CSPH*6012A**	0.98	1.07	58CV(A,X)110–20
CAP**6024A**	0.97	1.01	58CV(A,X)135–22
CNPH*6024A**	0.97	1.01	58CV(A,X)135–22
CNPH*6124A**	0.98	1.02	58CV(A,X)135–22
CNPV*6024A**	0.97	1.01	58CV(A,X)135–22
CNPV*6124A**	0.99	1.03	58CV(A,X)135–22
CSPH*6012A**	0.98	1.02	58CV(A,X)135–22
CAP**6024A**	0.98	1.02	58CV(A,X)155–22

COOLING INDOOR MODEL	CAPACITY	POWER	FURNACE MODEL
CNPH*6024A**	0.98	1.02	58CV(A X)155–22
CNPH*6124A**	0.98	1.02	58CV(A X)155–22
CNPV*6024A**	0.98	1.02	58CV(A X)155–22
CNPV*6124A**	0.99	1.03	58CV(A X)155–22
CSPH*6012A**	0.98	1.02	58CV(A X)155–22
CAP**6025A**	0.97	1.06	58HDV100––20
CNPH*6024A**	0.96	1.05	58ME(B,C)080–16
CSPH*6012A**	0.97	1.06	58ME(B,C)080–16
CAP**6021A**	0.97	1.01	58ME(B,C)100–20
CNPH*6024A**	0.97	1.01	58ME(B,C)100–20
CNPH*6124A**	0.97	1.01	58ME(B,C)100–20
CSPH*6012A**	0.98	1.02	58ME(B,C)100–20
CAP**6024A**	0.97	1.01	58ME(B,C)120–20
CNPH*6024A**	0.97	1.01	58ME(B,C)120–20
CNPH*6124A**	0.98	1.02	58ME(B,C)120–20
CNPV*6024A**	0.97	1.01	58ME(B,C)120–20
CNPV*6124A**	0.99	1.03	58ME(B,C)120–20
CSPH*6012A**	0.98	1.02	58ME(B,C)120–20
CNPV*6124A**	0.98	1.04	58MV(B,C)120–20
CSPH*6012A**	0.97	1.06	58MV(B,C)120–20
CAP**6021A**	0.97	1.01	58PH*110--20
CNPH*6024A**	0.97	1.01	58PH*110--20
CNPH*6124A**	0.98	1.02	58PH*110--20
CSPH*6012A**	0.98	1.02	58PH*110--20
CAP**6024A**	0.97	1.01	58PH*135--20
CNPH*6024A**	0.97	1.01	58PH*135--20

COOLING INDOOR MODEL	CAPACITY	POWER	FURNACE MODEL
CNPH*6124A**	0.97	1.01	58PH*135–20
CNPV*6024A**	0.97	1.01	58PH*135–20
CNPV*6124A**	0.99	1.03	58PH*135–20
CSPH*6012A**	0.98	1.02	58PH*135–20
CAP**6021A**	0.97	1.04	59*N*A100V21**20
CAP**6024A**	0.97	1.04	59*N*A100V21**20
CAP**6025A**	0.97	1.04	59*N*A100V21**20
CNPH*6024A**	0.97	1.04	59*N*A100V21**20
CNPH*6124A**	0.97	1.04	59*N*A100V21**20
CNPV*6024A**	0.97	1.04	59*N*A100V21**20
CNPV*6124A**	0.98	1.04	59*N*A100V21**20
CSPH*6012A**	0.98	1.05	59*N*A100V21**20
CAP**6024A**	0.98	1.02	59*N*A120V24**22
CAP**6025A**	0.98	1.02	59*N*A120V24**22
CNPH*6024A**	0.98	1.02	59*N*A120V24**22
CNPH*6124A**	0.98	1.02	59*N*A120V24**22
CNPV*6024A**	0.98	1.02	59*N*A120V24**22
CNPV*6124A**	0.99	1.02	59*N*A120V24**22
CSPH*6012A**	0.98	1.02	59*N*A120V24**22
CAP**6024A**	0.98	1.02	59*P5A120E24**22
CAP**6025A**	0.98	1.02	59*P5A120E24**22
CNPH*6024A**	0.98	1.02	59*P5A120E24**22
CNPH*6124A**	0.98	1.02	59*P5A120E24**22
CNPV*6024A**	0.98	1.02	59*P5A120E24**22
CNPV*6124A**	0.99	1.02	59*P5A120E24**22
CSPH*6012A**	0.98	1.02	59*P5A120E24**22

* Tested combination.

† The kW values include the compressor, outdoor fan motor, and indoor blower motor. The kW from supplement heaters should be added to these values to obtain total system kilowatts.

‡ Sensible capacities shown are based on 80°F (27°C) entering air at the indoor coil. For sensible capacities at other than 80°F (27°C), deduct 835 Btuh (245 kW) per 1000 CFM (480 L/S) of indoor coil air for each degree below 80°F (27°C), or add 835 Btuh (245 kW) per 1000 CFM (480 L/S) of indoor coil air per degree above 80°F (27°C).

Detailed cooling capacities are based on indoor and outdoor unit at the same elevation per AHRI standard 210/240–2008. If additional tubing length and/or indoor unit is located above outdoor unit, a slight variation in capacity may occur.

** System kw is total of indoor and outdoor unit kilowatts.

†† At TVA rating indoor condition (75°F edb/63°F ewb). All other indoor air temperatures are at 80°F edb.

EWB — Entering Wet Bulb

NOTE: When the required data fall between the published data, interpolation may be performed. Extrapolation is not an acceptable practice.

HEAT PUMP HEATING PERFORMANCE

INDOOR AIR		OUTDOOR COIL ENTERING AIR TEMPERATURES ° F (° C)																							
		–3 (–19.4)			7 (–13.9)			17 (–8.3)			27 (–2.8)			37 (2.8)			47 (8.3)			57 (13.9)			67 (19.4)		
EDB ° F (° C)	CFM	Capacity MBtuh		Total Syst. KW†	Capacity MBtuh		Total Syst. KW†	Capacity MBtuh		Total Syst. KW†	Capacity MBtuh		Total Syst. KW†	Capacity MBtuh		Total Syst. KW†	Capacity MBtuh		Total Syst. KW†	Capacity MBtuh		Total Syst. KW†	Capacity MBtuh		Total Syst. KW†
		Total	Integ*		Total	Integ*		Total	Integ*		Total	Integ*		Total	Integ*		Total	Integ*		Total	Integ*		Total	Integ*	
25HBC518A**30 Outdoor Section With FX4DNF019 Indoor Section																									
65 (18.3)	525	5.13	4.72	1.02	7.34	6.75	1.07	9.76	8.90	1.12	12.54	11.13	1.18	15.15	13.78	1.24	18.08	18.08	1.32	21.28	21.28	1.41	24.15	24.15	1.48
	600	5.22	4.80	1.02	7.46	6.85	1.07	9.91	9.03	1.11	12.68	11.27	1.17	15.35	13.97	1.22	18.35	18.35	1.29	21.43	21.43	1.35	24.11	24.11	1.42
	675	5.30	4.87	1.02	7.55	6.94	1.07	10.04	9.15	1.11	12.80	11.37	1.16	15.51	14.12	1.20	18.56	18.56	1.27	21.37	21.37	1.31	23.93	23.93	1.37
70 (21.1)	525	4.84	4.45	1.07	7.04	6.47	1.12	9.43	8.60	1.18	12.28	10.90	1.24	14.86	13.52	1.31	17.74	17.74	1.38	20.89	20.89	1.48	23.84	23.84	1.55
	600	4.92	4.53	1.07	7.15	6.57	1.12	9.58	8.74	1.17	12.44	11.04	1.23	15.05	13.70	1.28	18.00	18.00	1.35	21.15	21.15	1.42	23.87	23.87	1.49
	675	4.99	4.59	1.07	7.25	6.66	1.12	9.71	8.85	1.16	12.56	11.16	1.21	15.21	13.84	1.26	18.21	18.21	1.33	21.20	21.20	1.39	23.75	23.75	1.45
75 (23.9)	525	4.50	4.14	1.11	6.70	6.16	1.17	9.09	8.29	1.23	11.98	10.64	1.30	14.56	13.25	1.37	17.39	17.39	1.45	20.50	20.50	1.55	23.52	23.52	1.63
	600	4.59	4.22	1.12	6.82	6.27	1.17	9.24	8.42	1.22	12.15	10.79	1.29	14.75	13.43	1.34	17.65	17.65	1.42	20.82	20.82	1.50	23.58	23.58	1.57
	675	4.66	4.29	1.12	6.92	6.36	1.17	9.36	8.54	1.22	12.29	10.91	1.27	14.91	13.57	1.33	17.86	17.86	1.39	20.95	20.95	1.46	23.53	23.53	1.52

HEATING INDOOR MODEL	CAPACITY	POWER	FURNACE MODEL
*FX4DNF019	1.00	1.00	
FB4CNF018	1.01	1.05	
FB4CNF024	1.01	1.05	
FE4ANF002	1.00	1.02	
FF1ENP018	1.01	1.12	
FF1ENP019	1.01	1.05	
FF1ENP024	1.01	1.10	
FF1ENP025	1.01	1.02	
FV4BNF002	1.00	1.02	
FV4CNF002	1.00	1.02	
FX4CNF018	1.01	1.05	
FX4CNF024	1.01	1.03	
FX4DNF025	1.01	1.01	
FY4ANF018	1.01	1.12	
FY4ANF024	1.01	1.12	
FY5BNF018	1.01	1.09	
FY5BNF024	1.01	1.09	
CAP**1814A**	1.01	1.12	
CAP**2414A**	1.01	1.09	
CAP**2417A**	1.01	1.09	
CNPF*2418A**	1.01	1.08	
CNPH*2417A**	1.01	1.08	
CNPV*1814A**	1.01	1.09	
CNPV*1917A**	1.01	1.07	
CNPV*2414A**	1.01	1.08	
CNPV*2417A**	1.01	1.08	
CSPH*2412A**	1.01	1.08	
CAP**1814A**	0.98	1.07	58CV(A,X)070–12
CAP**2414A**	0.99	1.05	58CV(A,X)070–12
CNPH*2417A**	0.99	1.04	58CV(A,X)070–12
CNPV*1814A**	0.98	1.04	58CV(A,X)070–12
CNPV*2414A**	0.99	1.04	58CV(A,X)070–12
CSPH*2412A**	0.99	1.04	58CV(A,X)070–12
CAP**2417A**	0.99	1.04	58CV(A,X)090–16
CNPH*2417A**	0.99	1.03	58CV(A,X)090–16
CNPV*1917A**	1.00	1.03	58CV(A,X)090–16
CNPV*2417A**	0.99	1.03	58CV(A,X)090–16
CSPH*2412A**	0.99	1.04	58CV(A,X)090–16
CAP**2417A**	1.01	0.99	58ME(B,C)040–12
CNPH*2417A**	1.01	1.00	58ME(B,C)040–12
CNPV*1917A**	1.01	0.97	58ME(B,C)040–12
CNPV*2417A**	1.01	1.00	58ME(B,C)040–12
CSPH*2412A**	1.01	1.01	58ME(B,C)040–12
CAP**2417A**	1.01	1.01	58ME(B,C)060–12

HEATING INDOOR MODEL	CAPACITY	POWER	FURNACE MODEL
CNPH*2417A**	1.01	1.02	58ME(B,C)060–12
CNPV*1917A**	1.01	0.99	58ME(B,C)060–12
CNPV*2417A**	1.01	1.02	58ME(B,C)060–12
CSPH*2412A**	0.99	1.03	58ME(B,C)060–12
CAP**2417A**	0.99	1.05	58MV(B,C)060–14
CNPH*2417A**	0.99	1.04	58MV(B,C)060–14
CNPV*1917A**	1.00	1.03	58MV(B,C)060–14
CNPV*2417A**	0.99	1.04	58MV(B,C)060–14
CSPH*2412A**	0.99	1.04	58MV(B,C)060–14
CNPH*2417A**	0.99	1.04	58MV(B,C)080–14
CSPH*2412A**	0.99	1.04	58MV(B,C)080–14
CNPH*2417A**	0.99	1.04	58MVB040–14
CSPH*2412A**	0.99	1.04	58MVB040–14
CAP**1814A**	1.00	1.06	58PH*045--08
CAP**2414A**	1.01	1.03	58PH*045--08
CNPH*2417A**	1.01	1.03	58PH*045--08
CNPV*1814A**	1.00	1.04	58PH*045--08
CNPV*2414A**	1.01	1.03	58PH*045--08
CSPH*2412A**	1.01	1.03	58PH*045--08
CAP**2417A**	0.98	1.04	59*N*A060V17**14
CNPH*2417A**	0.99	1.04	59*N*A060V17**14
CNPV*1917A**	0.99	1.02	59*N*A060V17**14
CNPV*2417A**	0.99	1.04	59*N*A060V17**14
CSPH*2412A**	0.99	1.04	59*N*A060V17**14
CAP**2417A**	0.98	1.04	59*N*A080V17**14
CNPH*2417A**	0.98	1.04	59*N*A080V17**14
CNPV*1917A**	0.98	1.02	59*N*A080V17**14
CNPV*2417A**	0.98	1.04	59*N*A080V17**14
CSPH*2412A**	0.98	1.04	59*N*A080V17**14
CAP**1814A**	0.98	1.08	59*P5A040E14**10
CAP**2414A**	0.99	1.06	59*P5A040E14**10
CAP**2417A**	0.99	1.05	59*P5A040E14**10
CNPH*2417A**	0.99	1.05	59*P5A040E14**10
CNPV*1814A**	0.98	1.08	59*P5A040E14**10
CNPV*1917A**	0.99	1.04	59*P5A040E14**10
CNPV*2414A**	0.99	1.05	59*P5A040E14**10
CNPV*2417A**	0.99	1.05	59*P5A040E14**10
CSPH*2412A**	0.99	1.07	59*P5A040E14**10

See note on pg. 60

HEAT PUMP HEATING PERFORMANCE CONTINUED

INDOOR AIR		OUTDOOR COIL ENTERING AIR TEMPERATURES °F (°C)																							
		–3 (–19.4)			7 (–13.9)			17 (–8.3)			27 (–2.8)			37 (2.8)			47 (8.3)			57 (13.9)			67 (19.4)		
EDB °F (°C)	CFM	Capacity MBtuh		Total Syst. KW†	Capacity MBtuh		Total Syst. KW†	Capacity MBtuh		Total Syst. KW†	Capacity MBtuh		Total Syst. KW†	Capacity MBtuh		Total Syst. KW†	Capacity MBtuh		Total Syst. KW†	Capacity MBtuh		Total Syst. KW†	Capacity MBtuh		Total Syst. KW†
		Total	Integ*		Total	Integ*		Total	Integ*		Total	Integ*		Total	Integ*		Total	Integ*		Total	Integ*		Total	Integ*	
25HBC524A**30 Outdoor Section With FX4DNF025 Indoor Section																									
65 (18.3)	700	8.38	7.71	1.36	11.07	10.18	1.44	14.28	13.02	1.52	17.14	15.23	1.57	20.39	18.56	1.63	24.08	24.08	1.72	28.29	28.29	1.86	32.83	32.83	2.02
	800	8.52	7.83	1.36	11.24	10.33	1.44	14.45	13.17	1.50	17.34	15.40	1.54	20.64	18.79	1.60	24.41	24.41	1.68	28.68	28.68	1.81	32.90	32.90	1.94
	900	8.64	7.95	1.37	11.39	10.47	1.44	14.59	13.30	1.49	17.50	15.54	1.53	20.85	18.98	1.58	24.67	24.67	1.66	28.96	28.96	1.77	32.79	32.79	1.88
70 (21.1)	700	7.98	7.35	1.42	10.69	9.83	1.51	13.97	12.74	1.59	16.84	14.96	1.65	20.05	18.24	1.71	23.68	23.68	1.81	27.81	27.81	1.95	32.46	32.46	2.13
	800	8.12	7.47	1.43	10.86	9.98	1.51	14.15	12.90	1.58	17.04	15.13	1.63	20.30	18.47	1.68	24.00	24.00	1.77	28.21	28.21	1.90	32.56	32.56	2.04
	900	8.24	7.58	1.43	11.00	10.11	1.51	14.30	13.04	1.57	17.21	15.28	1.61	20.50	18.66	1.66	24.26	24.26	1.74	28.53	28.53	1.87	32.53	32.53	1.98
75 (23.9)	700	7.57	6.97	1.49	10.29	9.46	1.59	13.23	12.06	1.66	16.55	14.70	1.73	19.70	17.93	1.80	23.28	23.28	1.90	27.36	27.36	2.04	31.99	31.99	2.24
	800	7.71	7.09	1.50	10.46	9.61	1.58	13.44	12.26	1.65	16.74	14.87	1.71	19.94	18.15	1.77	23.59	23.59	1.86	27.76	27.76	1.99	32.27	32.27	2.15
	900	7.82	7.19	1.50	10.60	9.74	1.58	13.66	12.45	1.64	16.91	15.02	1.70	20.15	18.33	1.75	23.85	23.85	1.83	28.05	28.05	1.96	32.25	32.25	2.08

HEATING INDOOR MODEL	CAPACITY	POWER	FURNACE MODEL
*FX4DNF025	1.00	1.00	
FB4CNF024	1.00	1.04	
FB4CNF030	1.00	1.00	
FE4AN(B,F)003	1.00	1.00	
FE4ANF002	1.00	1.00	
FF1ENP024	1.00	1.08	
FF1ENP025	1.00	1.02	
FF1ENP030	1.00	1.08	
FF1ENP031	1.00	1.03	
FF1ENP037	1.00	1.01	
FV4BN(B,F)003	1.00	1.00	
FV4BNF002	1.00	1.00	
FV4CN(B,F)003	1.00	1.00	
FV4CNF002	1.00	1.00	
FX4CNF024	1.00	1.03	
FX4CNF030	1.00	1.00	
FX4DN(B,F)031	1.00	1.00	
FY4ANF024	1.00	1.09	
FY4ANF030	1.00	1.06	
FY5BNF024	1.00	1.04	
FY5BNF030	1.00	1.02	
CAP**2414A**	1.00	1.06	
CAP**2417A**	1.00	1.06	
CAP**3014A**	1.00	1.06	
CAP**3017A**	1.00	1.06	
CNPF*2418A**	1.00	1.04	
CNPH*2417A**	1.00	1.04	
CNPH*3017A**	1.00	1.05	
CNPV*2414A**	1.00	1.04	
CNPV*2417A**	1.00	1.04	
CNPV*3014A**	1.00	1.05	
CNPV*3017A**	1.00	1.05	
CNPV*3117A**	1.00	1.01	
CSPH*2412A**	1.00	1.04	
CSPH*3012A**	1.00	1.05	
CAP**2414A**	1.00	1.05	58CV(A,X)070–12
CAP**3014A**	1.00	1.04	58CV(A,X)070–12
CNPH*2417A**	1.00	1.03	58CV(A,X)070–12
CNPH*3017A**	1.00	1.03	58CV(A,X)070–12
CNPV*2414A**	1.00	1.03	58CV(A,X)070–12
CNPV*3014A**	1.00	1.04	58CV(A,X)070–12
CSPH*2412A**	1.00	1.03	58CV(A,X)070–12
CSPH*3012A**	1.00	1.04	58CV(A,X)070–12
CAP**2417A**	1.00	1.04	58CV(A,X)090–16

HEATING INDOOR MODEL	CAPACITY	POWER	FURNACE MODEL
CAP**3017A**	1.00	1.03	58CV(A X)090–16
CNPH*2417A**	1.00	1.02	58CV(A X)090–16
CNPH*3017A**	1.00	1.02	58CV(A X)090–16
CNPV*2417A**	1.00	1.02	58CV(A X)090–16
CNPV*3017A**	1.00	1.02	58CV(A X)090–16
CNPV*3117A**	1.00	0.98	58CV(A X)090–16
CSPH*2412A**	1.00	1.02	58CV(A X)090–16
CSPH*3012A**	1.00	1.03	58CV(A X)090–16
CNPH*2417A**	1.00	1.02	58CV(A X)110–20
CNPH*3017A**	1.00	1.03	58CV(A X)110–20
CSPH*2412A**	1.00	1.03	58CV(A X)110–20
CSPH*3012A**	1.00	1.03	58CV(A X)110–20
CNPH*2417A**	1.00	1.02	58CV(A X)135–22
CNPH*3017A**	1.00	1.02	58CV(A X)135–22
CSPH*2412A**	1.00	1.02	58CV(A X)135–22
CSPH*3012A**	1.00	1.03	58CV(A X)135–22
CNPH*2417A**	1.00	1.02	58CV(A X)155–22
CNPH*3017A**	1.00	1.02	58CV(A X)155–22
CSPH*2412A**	1.00	1.02	58CV(A X)155–22
CSPH*3012A**	1.00	1.02	58CV(A X)155–22
CAP**3619A**	1.00	1.01	58HDV040––12
CAP**3619A**	1.00	0.99	58HDV060––12
CAP**2417A**	1.00	1.00	58ME(B,C)040–12
CAP**3017A**	1.00	0.98	58ME(B,C)040–12
CNPH*2417A**	1.00	0.99	58ME(B,C)040–12
CNPH*3017A**	1.00	0.98	58ME(B,C)040–12
CNPV*2417A**	1.00	0.99	58ME(B,C)040–12
CNPV*3017A**	1.00	0.98	58ME(B,C)040–12
CNPV*3117A**	1.00	0.93	58ME(B,C)040–12
CSPH*2412A**	1.00	1.00	58ME(B,C)040–12
CSPH*3012A**	1.00	0.99	58ME(B,C)040–12
CAP**2417A**	1.00	0.99	58ME(B,C)060–12
CAP**3017A**	1.00	0.98	58ME(B,C)060–12
CNPH*2417A**	1.00	0.99	58ME(B,C)060–12
CNPH*3017A**	1.00	0.98	58ME(B,C)060–12
CNPV*2417A**	1.00	0.99	58ME(B,C)060–12
CNPV*3017A**	1.00	0.98	58ME(B,C)060–12
CNPV*3117A**	1.00	0.93	58ME(B,C)060–12
CSPH*2412A**	1.00	1.00	58ME(B,C)060–12
CSPH*3012A**	1.00	0.98	58ME(B,C)060–12
CAP**2417A**	1.00	1.00	58ME(B,C)080–12
CAP**3017A**	1.00	0.99	58ME(B,C)080–12
CNPH*2417A**	1.00	1.00	58ME(B,C)080–12
CNPH*3017A**	1.00	0.99	58ME(B,C)080–12

HEATING INDOOR MODEL	CAPACITY	POWER	FURNACE MODEL
CNPV*2417A**	1.00	1.00	58ME(B,C)080–12
CNPV*3017A**	1.00	0.99	58ME(B,C)080–12
CNPV*3117A**	1.00	0.94	58ME(B,C)080–12
CSPH*2412A**	1.00	1.01	58ME(B,C)080–12
CSPH*3012A**	1.00	1.00	58ME(B,C)080–12
CAP**2417A**	1.00	1.01	58MV(B,C)060–14
CAP**3017A**	1.00	1.00	58MV(B,C)060–14
CNPH*2417A**	1.00	1.00	58MV(B,C)060–14
CNPH*3017A**	1.00	1.00	58MV(B,C)060–14
CNPV*2417A**	1.00	1.00	58MV(B,C)060–14
CNPV*3017A**	1.00	1.00	58MV(B,C)060–14
CNPV*3117A**	1.00	0.96	58MV(B,C)060–14
CSPH*2412A**	1.00	1.00	58MV(B,C)060–14
CSPH*3012A**	1.00	1.00	58MV(B,C)060–14
CNPH*2417A**	1.00	1.03	58MV(B,C)080–14
CNPH*3017A**	1.00	1.03	58MV(B,C)080–14
CSPH*2412A**	1.00	1.03	58MV(B,C)080–14
CSPH*3012A**	1.00	1.03	58MV(B,C)080–14
CNPH*2417A**	1.00	1.04	58MV(B,C)080–20
CNPH*3017A**	1.00	1.05	58MV(B,C)080–20
CSPH*2412A**	1.00	1.05	58MV(B,C)080–20
CSPH*3012A**	1.00	1.05	58MV(B,C)080–20
CNPH*2417A**	1.00	1.02	58MV(B,C)100–20
CNPH*3017A**	1.00	1.03	58MV(B,C)100–20
CSPH*2412A**	1.00	1.03	58MV(B,C)100–20
CSPH*3012A**	1.00	1.03	58MV(B,C)100–20
CNPH*2417A**	1.00	1.01	58MV(B,C)120–20
CNPH*3017A**	1.00	1.02	58MV(B,C)120–20
CSPH*2412A**	1.00	1.01	58MV(B,C)120–20
CSPH*3012A**	1.00	1.02	58MV(B,C)120–20
CNPH*2417A**	1.00	1.02	58MVB040–14
CNPH*3017A**	1.00	1.03	58MVB040–14
CSPH*2412A**	1.00	1.03	58MVB040–14
CSPH*3012A**	1.00	1.03	58MVB040–14
CAP**2414A**	1.00	1.03	58PH*045–08
CAP**3014A**	1.00	1.02	58PH*045–08
CNPH*2417A**	1.00	1.02	58PH*045–08
CNPH*3017A**	1.00	1.01	58PH*045–08
CNPV*2414A**	1.00	1.02	58PH*045–08
CNPV*3014A**	1.00	1.03	58PH*045–08
CSPH*2412A**	1.00	1.02	58PH*045–08
CSPH*3012A**	1.00	1.02	58PH*045–08
CAP**2417A**	0.95	1.00	59*N*A060V17**14
CAP**3017A**	0.95	0.99	59*N*A060V17**14

HEAT PUMP HEATING PERFORMANCE CONTINUED

25HBC524A30 Outdoor Section With FX4DNF025 Indoor Section**

HEATING INDOOR MODEL	CAPACITY	POWER	FURNACE MODEL
CNPH*2417A**	0.95	0.98	59*N*A060V17**14
CNPH*3017A**	0.95	0.99	59*N*A060V17**14
CNPH*3117A**	0.95	0.95	59*N*A060V17**14
CNPV*2417A**	0.95	0.98	59*N*A060V17**14
CNPV*3017A**	0.95	0.99	59*N*A060V17**14
CNPV*3117A**	0.95	0.95	59*N*A060V17**14
CSPH*2412A**	0.95	0.99	59*N*A060V17**14
CSPH*3012A**	0.95	0.97	59*N*A060V17**14
CAP**2417A**	0.95	1.00	59*N*A080V17**14
CAP**3017A**	0.95	1.00	59*N*A080V17**14
CNPH*2417A**	0.95	0.99	59*N*A080V17**14
CNPH*3017A**	0.95	0.99	59*N*A080V17**14
CNPH*3117A**	0.95	0.95	59*N*A080V17**14
CNPV*2417A**	0.95	0.99	59*N*A080V17**14
CNPV*3017A**	0.95	0.99	59*N*A080V17**14
CNPV*3117A**	0.95	0.95	59*N*A080V17**14
CSPH*2412A**	0.95	0.99	59*N*A080V17**14
CSPH*3012A**	0.95	0.98	59*N*A080V17**14
CNPH*2417A**	0.95	0.96	59*N*A100V21**20
CNPH*3017A**	0.95	0.97	59*N*A100V21**20
CNPH*3117A**	0.95	0.92	59*N*A100V21**20
CSPH*2412A**	0.95	0.96	59*N*A100V21**20
CSPH*3012A**	0.95	0.95	59*N*A100V21**20
CNPH*2417A**	0.95	0.96	59*N*A120V24**22
CNPH*3017A**	0.95	0.97	59*N*A120V24**22
CNPH*3117A**	0.95	0.93	59*N*A120V24**22
CSPH*2412A**	0.95	0.97	59*N*A120V24**22
CSPH*3012A**	0.95	0.96	59*N*A120V24**22
CAP**2414A**	0.95	1.01	59*P5A040E14**10
CAP**2417A**	0.95	1.00	59*P5A040E14**10
CAP**3014A**	0.95	1.00	59*P5A040E14**10
CAP**3017A**	0.95	0.99	59*P5A040E14**10
CNPH*2417A**	0.95	0.99	59*P5A040E14**10
CNPH*3017A**	0.95	0.99	59*P5A040E14**10
CNPH*3117A**	0.95	0.95	59*P5A040E14**10
CNPV*2414A**	0.95	0.99	59*P5A040E14**10
CNPV*2417A**	0.95	0.99	59*P5A040E14**10
CNPV*3014A**	0.95	1.00	59*P5A040E14**10
CNPV*3017A**	0.95	0.99	59*P5A040E14**10
CNPV*3117A**	0.95	0.95	59*P5A040E14**10
CSPH*2412A**	0.95	0.99	59*P5A040E14**10
CSPH*3012A**	0.95	0.98	59*P5A040E14**10
CAP**2417A**	0.95	0.99	59*P5A060E17**14
CAP**3017A**	0.95	0.98	59*P5A060E17**14
CNPH*2417A**	0.95	0.99	59*P5A060E17**14
CNPH*3017A**	0.95	0.98	59*P5A060E17**14
CNPH*3117A**	0.95	0.93	59*P5A060E17**14
CNPV*2417A**	0.95	0.99	59*P5A060E17**14
CNPV*3017A**	0.95	0.98	59*P5A060E17**14
CNPV*3117A**	0.95	0.93	59*P5A060E17**14
CSPH*2412A**	0.95	1.00	59*P5A060E17**14
CSPH*3012A**	0.95	0.97	59*P5A060E17**14

See note on pg. 60

HEAT PUMP HEATING PERFORMANCE CONTINUED

INDOOR AIR		OUTDOOR COIL ENTERING AIR TEMPERATURES °F (°C)																							
		−3 (−19.4)			7 (−13.9)			17 (−8.3)			27 (−2.8)			37 (2.8)			47 (8.3)			57 (13.9)			67 (19.4)		
EDB °F (°C)	CFM	Capacity MBtuh		Total Syst. KW†	Capacity MBtuh		Total Syst. KW†	Capacity MBtuh		Total Syst. KW†	Capacity MBtuh		Total Syst. KW†	Capacity MBtuh		Total Syst. KW†	Capacity MBtuh		Total Syst. KW†	Capacity MBtuh		Total Syst. KW†	Capacity MBtuh		Total Syst. KW†
		Total	Integ*		Total	Integ*		Total	Integ*		Total	Integ*		Total	Integ*		Total	Integ*		Total	Integ*		Total	Integ*	
25HBC530A**30 Outdoor Section With FX4DNF031 Indoor Section																									
65 (18.3)	875	9.76	8.98	1.59	13.14	12.08	1.66	16.80	15.32	1.73	21.11	18.75	1.83	25.07	22.82	1.91	29.50	29.50	2.02	34.45	34.45	2.14	39.00	39.00	2.24
	1000	9.94	9.15	1.60	13.35	12.27	1.66	17.06	15.56	1.73	21.33	18.94	1.81	25.37	23.08	1.89	29.87	29.87	1.98	34.61	34.61	2.07	38.97	38.97	2.17
	1125	10.10	9.29	1.61	13.53	12.44	1.67	17.28	15.75	1.73	21.54	19.13	1.80	25.61	23.31	1.87	30.18	30.18	1.96	34.65	34.65	2.03	38.83	38.83	2.13
70 (21.1)	875	9.22	8.49	1.66	12.63	11.61	1.74	16.30	14.86	1.82	20.75	18.43	1.92	24.68	22.46	2.01	29.04	29.04	2.12	33.93	33.93	2.25	38.55	38.55	2.35
	1000	9.40	8.65	1.67	12.84	11.80	1.74	16.55	15.09	1.81	20.99	18.64	1.90	24.96	22.71	1.98	29.40	29.40	2.08	34.27	34.27	2.18	38.59	38.59	2.28
	1125	9.56	8.80	1.69	13.03	11.97	1.75	16.77	15.29	1.81	21.18	18.81	1.89	25.20	22.93	1.97	29.70	29.70	2.06	34.31	34.31	2.14	38.50	38.50	2.23
75 (23.9)	875	8.65	7.96	1.74	12.09	11.11	1.82	15.76	14.37	1.90	20.33	18.05	2.01	24.28	22.09	2.11	28.57	28.57	2.22	33.39	33.39	2.36	38.09	38.09	2.46
	1000	8.83	8.12	1.75	12.30	11.30	1.82	16.02	14.60	1.90	20.59	18.29	2.00	24.56	22.35	2.08	28.93	28.93	2.18	33.82	33.82	2.29	38.19	38.19	2.39
	1125	8.98	8.26	1.76	12.48	11.47	1.83	16.23	14.80	1.90	20.81	18.48	1.99	24.80	22.56	2.06	29.22	29.22	2.16	33.98	33.98	2.25	38.16	38.16	2.34

HEATING INDOOR MODEL	CAPACITY	POWER	FURNACE MODEL
*FX4DN(B F)031	1.00	1.00	
FB4CNF030	1.00	1.03	
FB4CNF036	1.00	1.03	
FE4AN(B,F)003	0.98	0.99	
FE4AN(B,F)005	0.98	0.94	
FE4ANF002	0.99	1.00	
FF1ENP030	1.01	1.10	
FF1ENP031	1.00	1.03	
FF1ENP036	1.02	1.09	
FF1ENP037	1.01	1.04	
FV4BN(B,F)003	0.98	0.99	
FV4BN(B,F)005	0.98	0.94	
FV4BNF002	0.99	1.00	
FV4CN(B,F)003	0.98	0.99	
FV4CN(B,F)005	0.98	0.94	
FV4CNF002	0.99	1.00	
FX4CN(B,F)036	1.01	1.03	
FX4CNF030	1.00	1.02	
FX4DN(B,F)037	1.01	0.97	
FY4ANF030	1.01	1.09	
FY4ANF036	1.02	1.10	
FY5BNF030	1.01	1.04	
FY5BNF036	1.01	1.06	
CAP**3014A**	1.02	1.09	
CAP**3017A**	1.02	1.09	
CAP**3614A**	1.02	1.09	
CAP**3617A**	1.02	1.09	
CAP**3619A**	1.02	1.09	
CAP**3621A**	1.02	1.09	
CNPF*3618A**	1.02	1.09	
CNPH*3017A**	1.02	1.09	
CNPH*3617A**	1.02	1.09	
CNPV*3014A**	1.02	1.09	
CNPV*3017A**	1.02	1.09	
CNPV*3117A**	1.03	1.06	
CNPV*3617A**	1.02	1.09	
CNPV*3621A**	1.02	1.09	
CNPV*3717A**	1.03	1.03	
CSPH*3012A**	1.02	1.08	
CSPH*3612A**	1.02	1.05	
CAP**3014A**	0.99	1.04	58CV(A,X)070−12
CAP**3614A**	0.99	1.03	58CV(A,X)070−12
CNPH*3017A**	0.99	1.03	58CV(A,X)070−12
CNPH*3617A**	0.99	1.03	58CV(A,X)070−12

HEATING INDOOR MODEL	CAPACITY	POWER	FURNACE MODEL
CNPV*3014A**	0.99	1.04	58CV(A X)070−12
CSPH*3012A**	0.99	1.03	58CV(A X)070−12
CSPH*3612A**	0.99	1.01	58CV(A X)070−12
CAP**3017A**	0.98	1.02	58CV(A X)090−16
CAP**3617A**	0.98	1.01	58CV(A X)090−16
CNPH*3017A**	0.98	1.02	58CV(A X)090−16
CNPH*3617A**	0.98	1.02	58CV(A X)090−16
CNPV*3017A**	0.98	1.02	58CV(A X)090−16
CNPV*3117A**	0.99	0.99	58CV(A X)090−16
CNPV*3617A**	0.98	1.02	58CV(A X)090−16
CNPV*3717A**	0.99	0.96	58CV(A X)090−16
CSPH*3012A**	0.99	1.02	58CV(A X)090−16
CSPH*3612A**	0.99	0.99	58CV(A X)090−16
CAP**3621A**	0.99	1.01	58CV(A X)110−20
CNPH*3017A**	0.99	1.02	58CV(A X)110−20
CNPH*3617A**	0.99	1.02	58CV(A X)110−20
CNPV*3621A**	0.99	1.02	58CV(A X)110−20
CSPH*3012A**	0.99	1.02	58CV(A X)110−20
CSPH*3612A**	0.99	0.99	58CV(A X)110−20
CNPH*3017A**	0.99	1.02	58CV(A X)135−22
CNPH*3617A**	0.99	1.02	58CV(A X)135−22
CSPH*3012A**	0.99	1.02	58CV(A X)135−22
CSPH*3612A**	0.99	0.99	58CV(A X)135−22
CNPH*3017A**	0.98	1.01	58CV(A X)155−22
CNPH*3617A**	0.98	1.01	58CV(A X)155−22
CSPH*3012A**	0.99	1.01	58CV(A X)155−22
CSPH*3612A**	0.99	0.98	58CV(A X)155−22
CAP**3619A**	1.00	1.05	58HDV040−−12
CAP**3619A**	1.00	1.05	58HDV040−−12
CAP**3619A**	1.00	1.03	58HDV060−−12
CAP**3619A**	1.00	1.03	58HDV060−−12
CAP**3017A**	0.99	1.01	58ME(B,C)040−12
CAP**3617A**	0.99	1.00	58ME(B,C)040−12
CNPH*3017A**	0.99	1.01	58ME(B,C)040−12
CNPH*3617A**	0.99	1.01	58ME(B,C)040−12
CNPV*3017A**	0.99	1.01	58ME(B,C)040−12
CNPV*3117A**	1.00	0.97	58ME(B,C)040−12
CNPV*3617A**	0.99	1.01	58ME(B,C)040−12
CNPV*3717A**	1.00	0.94	58ME(B,C)040−12
CSPH*3012A**	0.99	1.01	58ME(B,C)040−12
CSPH*3612A**	1.00	0.98	58ME(B,C)040−12
CAP**3017A**	0.99	1.01	58ME(B,C)060−12
CAP**3617A**	0.99	1.00	58ME(B,C)060−12
CNPH*3017A**	0.99	1.01	58ME(B,C)060−12

HEATING INDOOR MODEL	CAPACITY	POWER	FURNACE MODEL
CNPH*3617A**	0.99	1.01	58ME(B,C)060−12
CNPV*3017A**	0.99	1.01	58ME(B,C)060−12
CNPV*3117A**	1.01	0.97	58ME(B,C)060−12
CNPV*3617A**	0.99	1.01	58ME(B,C)060−12
CNPV*3717A**	1.00	0.94	58ME(B,C)060−12
CSPH*3012A**	0.99	1.01	58ME(B,C)060−12
CSPH*3612A**	1.00	0.98	58ME(B,C)060−12
CAP**3017A**	0.99	1.01	58ME(B,C)080−12
CAP**3617A**	0.99	1.00	58ME(B,C)080−12
CNPH*3017A**	0.99	1.01	58ME(B,C)080−12
CNPH*3617A**	0.99	1.01	58ME(B,C)080−12
CNPV*3017A**	0.99	1.01	58ME(B,C)080−12
CNPV*3117A**	1.00	0.97	58ME(B,C)080−12
CNPV*3617A**	0.99	1.01	58ME(B,C)080−12
CNPV*3717A**	1.00	0.94	58ME(B,C)080−12
CSPH*3012A**	0.99	1.01	58ME(B,C)080−12
CSPH*3612A**	1.00	0.98	58ME(B,C)080−12
CAP**3017A**	1.00	1.01	58ME(B,C)080−16
CAP**3617A**	1.00	1.00	58ME(B,C)080−16
CNPH*3017A**	1.00	1.01	58ME(B,C)080−16
CNPH*3617A**	1.00	1.01	58ME(B,C)080−16
CNPV*3017A**	1.00	1.01	58ME(B,C)080−16
CNPV*3117A**	1.01	0.97	58ME(B,C)080−16
CNPV*3617A**	1.00	1.01	58ME(B,C)080−16
CNPV*3717A**	1.01	0.94	58ME(B,C)080−16
CSPH*3012A**	1.00	1.02	58ME(B,C)080−16
CSPH*3612A**	1.01	0.98	58ME(B,C)080−16
CAP**3017A**	0.99	1.02	58MV(B,C)060−14
CAP**3617A**	0.99	1.01	58MV(B,C)060−14
CNPH*3017A**	0.99	1.01	58MV(B,C)060−14
CNPH*3617A**	0.99	1.01	58MV(B,C)060−14
CNPV*3017A**	0.99	1.01	58MV(B,C)060−14
CNPV*3117A**	1.00	0.99	58MV(B,C)060−14
CNPV*3617A**	0.99	1.01	58MV(B,C)060−14
CNPV*3717A**	1.00	0.96	58MV(B,C)060−14
CSPH*3012A**	0.99	1.02	58MV(B,C)060−14
CSPH*3612A**	0.99	0.99	58MV(B,C)060−14
CAP**3621A**	0.98	1.02	58MV(B,C)080−14
CNPH*3017A**	0.98	1.03	58MV(B,C)080−14
CNPH*3617A**	0.98	1.03	58MV(B,C)080−14
CNPV*3621A**	0.98	1.03	58MV(B,C)080−14
CNPV*4221A**	0.99	1.02	58MV(B,C)080−14
CSPH*3012A**	0.99	1.04	58MV(B,C)080−14
CSPH*3612A**	0.99	1.00	58MV(B,C)080−14

HEAT PUMP HEATING PERFORMANCE CONTINUED

25HBC530A30 Outdoor Section With FX4DNF031 Indoor Section**

HEATING INDOOR MODEL	CAPACITY	POWER	FURNACE MODEL
CAP**3621A**	0.99	1.02	58MV(B,C)080–20
CNPH*3017A**	0.99	1.03	58MV(B,C)080–20
CNPH*3617A**	0.99	1.03	58MV(B,C)080–20
CNPV*3621A**	0.99	1.03	58MV(B,C)080–20
CSPH*3012A**	0.99	1.02	58MV(B,C)080–20
CSPH*3612A**	0.99	1.00	58MV(B,C)080–20
CAP**3621A**	0.98	1.03	58MV(B,C)100–20
CNPH*3017A**	0.98	1.03	58MV(B,C)100–20
CNPH*3617A**	0.98	1.03	58MV(B,C)100–20
CNPV*3621A**	0.98	1.03	58MV(B,C)100–20
CSPH*3012A**	0.98	1.03	58MV(B,C)100–20
CSPH*3612A**	0.99	1.01	58MV(B,C)100–20
CNPH*3017A**	0.99	1.02	58MV(B,C)120–20
CNPH*3617A**	0.99	1.02	58MV(B,C)120–20
CSPH*3012A**	0.99	1.02	58MV(B,C)120–20
CSPH*3612A**	0.99	0.99	58MV(B,C)120–20
CNPH*3017A**	0.99	1.03	58MVB040–14
CNPH*3617A**	0.99	1.03	58MVB040–14
CSPH*3012A**	0.99	1.03	58MVB040–14
CSPH*3612A**	0.99	1.01	58MVB040–14
CAP**3017A**	0.99	1.03	58PH*070–16
CAP**3617A**	0.99	1.02	58PH*070–16
CNPH*3017A**	0.99	1.03	58PH*070–16
CNPH*3617A**	0.99	1.03	58PH*070–16
CNPV*3017A**	0.99	1.03	58PH*070–16
CNPV*3117A**	1.01	1.00	58PH*070–16
CNPV*3617A**	0.99	1.03	58PH*070–16
CNPV*3717A**	1.01	0.97	58PH*070–16
CSPH*3012A**	0.99	1.03	58PH*070–16
CSPH*3612A**	1.00	1.00	58PH*070–16
CAP**3621A**	0.99	1.00	58PH*090–16
CNPH*3017A**	0.99	1.02	58PH*090–16
CNPH*3617A**	0.99	1.02	58PH*090–16
CNPV*3621A**	0.99	1.02	58PH*090–16
CSPH*3012A**	0.99	1.03	58PH*090–16
CSPH*3612A**	1.00	0.99	58PH*090–16
CAP**2417A**	0.95	1.00	59*N*A060V17**14
CAP**3017A**	0.95	0.99	59*N*A060V17**14
CNPH*2417A**	0.95	0.98	59*N*A060V17**14
CNPH*3017A**	0.95	0.99	59*N*A060V17**14
CNPH*3117A**	0.95	0.95	59*N*A060V17**14
CNPV*2417A**	0.95	0.98	59*N*A060V17**14
CNPV*3017A**	0.95	0.99	59*N*A060V17**14
CNPV*3117A**	0.95	0.95	59*N*A060V17**14
CSPH*2412A**	0.95	0.99	59*N*A060V17**14
CSPH*3012A**	0.95	0.97	59*N*A060V17**14
CAP**2417A**	0.95	1.00	59*N*A080V17**14
CAP**3017A**	0.95	1.00	59*N*A080V17**14
CNPH*2417A**	0.95	0.99	59*N*A080V17**14
CNPH*3017A**	0.95	0.99	59*N*A080V17**14
CNPH*3117A**	0.95	0.95	59*N*A080V17**14
CNPV*2417A**	0.95	0.99	59*N*A080V17**14
CNPV*3017A**	0.95	0.99	59*N*A080V17**14
CNPV*3117A**	0.95	0.95	59*N*A080V17**14
CSPH*2412A**	0.95	0.99	59*N*A080V17**14
CSPH*3012A**	0.95	0.98	59*N*A080V17**14
CNPH*2417A**	0.95	0.96	59*N*A100V21**20
CNPH*3017A**	0.95	0.97	59*N*A100V21**20
CNPH*3117A**	0.95	0.92	59*N*A100V21**20

HEATING INDOOR MODEL	CAPACITY	POWER	FURNACE MODEL
CSPH*2412A**	0.95	0.96	59*N*A100V21**20
CSPH*3012A**	0.95	0.95	59*N*A100V21**20
CNPH*2417A**	0.95	0.96	59*N*A120V24**22
CNPH*3017A**	0.95	0.97	59*N*A120V24**22
CNPH*3117A**	0.95	0.93	59*N*A120V24**22
CSPH*2412A**	0.95	0.97	59*N*A120V24**22
CSPH*3012A**	0.95	0.96	59*N*A120V24**22
CAP**2414A**	0.95	1.01	59*P5A040E14**10
CAP**2417A**	0.95	1.00	59*P5A040E14**10
CAP**3014A**	0.95	1.00	59*P5A040E14**10
CAP**3017A**	0.95	0.99	59*P5A040E14**10
CNPH*2417A**	0.95	0.99	59*P5A040E14**10
CNPH*3017A**	0.95	0.99	59*P5A040E14**10
CNPH*3117A**	0.95	0.95	59*P5A040E14**10
CNPV*2414A**	0.95	0.99	59*P5A040E14**10
CNPV*2417A**	0.95	0.99	59*P5A040E14**10
CNPV*3014A**	0.95	1.00	59*P5A040E14**10
CNPV*3017A**	0.95	0.99	59*P5A040E14**10
CNPV*3117A**	0.95	0.95	59*P5A040E14**10
CSPH*2412A**	0.95	0.99	59*P5A040E14**10
CSPH*3012A**	0.95	0.98	59*P5A040E14**10
CAP**2417A**	0.95	0.99	59*P5A060E17**14
CAP**3017A**	0.95	0.98	59*P5A060E17**14
CNPH*2417A**	0.95	0.99	59*P5A060E17**14
CNPH*3017A**	0.95	0.98	59*P5A060E17**14
CNPH*3117A**	0.95	0.93	59*P5A060E17**14
CNPV*2417A**	0.95	0.99	59*P5A060E17**14
CNPV*3017A**	0.95	0.98	59*P5A060E17**14
CNPV*3117A**	0.95	0.93	59*P5A060E17**14
CSPH*2412A**	0.95	1.00	59*P5A060E17**14
CSPH*3012A**	0.95	0.97	59*P5A060E17**14

See note on pg. 60

HEAT PUMP HEATING PERFORMANCE CONTINUED

INDOOR AIR		OUTDOOR COIL ENTERING AIR TEMPERATURES °F (°C)																							
		−3 (−19.4)			7 (−13.9)			17 (−8.3)			27 (−2.8)			37 (2.8)			47 (8.3)			57 (13.9)			67 (19.4)		
EDB °F (°C)	CFM	Capacity MBtuh		Total Syst. KW†	Capacity MBtuh		Total Syst. KW†	Capacity MBtuh		Total Syst. KW†	Capacity MBtuh		Total Syst. KW†	Capacity MBtuh		Total Syst. KW†	Capacity MBtuh		Total Syst. KW†	Capacity MBtuh		Total Syst. KW†	Capacity MBtuh		Total Syst. KW†
		Total	Integ*		Total	Integ*		Total	Integ*		Total	Integ*		Total	Integ*		Total	Integ*		Total	Integ*		Total	Integ*	
25HBC536A**30 Outdoor Section With FX4DNF037 Indoor Section																									
65 (18.3)	1050	11.44	10.52	1.97	15.33	14.09	2.06	19.61	17.88	2.15	24.41	21.68	2.26	29.99	27.29	2.39	35.11	35.11	2.52	40.74	40.74	2.65	46.35	46.35	2.78
	1200	11.66	10.73	1.98	15.60	14.34	2.06	19.93	18.17	2.15	24.85	22.07	2.24	30.35	27.62	2.36	35.57	35.57	2.47	41.14	41.14	2.57	46.50	46.50	2.69
	1350	11.86	10.91	2.00	15.83	14.55	2.07	20.21	18.42	2.15	25.78	22.90	2.25	30.66	27.90	2.34	35.94	35.94	2.44	41.32	41.32	2.53	46.51	46.51	2.63
70 (21.1)	1050	10.73	9.87	2.07	14.64	13.45	2.16	18.94	17.26	2.25	23.71	21.05	2.36	29.52	26.86	2.51	34.56	34.56	2.63	40.20	40.20	2.78	45.76	45.76	2.91
	1200	10.95	10.08	2.08	14.91	13.70	2.16	19.26	17.56	2.25	24.10	21.41	2.35	29.87	27.19	2.47	35.00	35.00	2.59	40.60	40.60	2.70	45.95	45.95	2.82
	1350	11.15	10.26	2.09	15.15	13.92	2.17	19.53	17.81	2.25	24.44	21.70	2.34	30.17	27.46	2.45	35.37	35.37	2.56	40.83	40.83	2.65	46.01	46.01	2.76
75 (23.9)	1050	9.98	9.19	2.17	13.92	12.79	2.26	18.23	16.62	2.36	22.97	20.40	2.47	28.97	26.36	2.63	34.00	34.00	2.76	39.58	39.58	2.92	45.14	45.14	3.04
	1200	10.20	9.38	2.18	14.18	13.03	2.26	18.55	16.92	2.35	23.37	20.76	2.45	29.35	26.71	2.59	34.43	34.43	2.71	40.10	40.10	2.84	45.39	45.39	2.95
	1350	10.39	9.55	2.19	14.41	13.25	2.27	18.82	17.16	2.35	23.70	21.05	2.45	29.66	26.99	2.57	34.80	34.80	2.68	40.32	40.32	2.78	45.49	45.49	2.89

HEATING INDOOR MODEL	CAPACITY	POWER	FURNACE MODEL
*FX4DN(B F)037	1.00	1.00	
FB4CNF036	0.99	1.06	
FB4CNF042	1.00	1.01	
FE4AN(B,F)003	0.97	1.02	
FE4AN(B,F)005	0.98	0.97	
FE4ANB006	0.98	0.94	
FE4ANF002	0.98	1.04	
FF1ENP036	1.01	1.11	
FF1ENP037	1.01	1.09	
FV4BN(B,F)003	0.97	1.02	
FV4BN(B,F)005	0.98	0.97	
FV4BNB006	0.98	0.94	
FV4BNF002	0.98	1.04	
FV4CN(B,F)003	0.97	1.02	
FV4CN(B,F)005	0.98	0.97	
FV4CNB006	0.98	0.94	
FV4CNF002	0.98	1.04	
FX4CN(B,F)036	0.99	1.04	
FX4CN(B,F)042	1.01	1.03	
FX4DN(B,F)043	0.97	0.97	
FY4ANF036	1.01	1.11	
FY4ANF042	1.02	1.09	
FY5BNF036	1.00	1.06	
FY5BNF042	1.01	1.04	
CAP**3614A**	1.00	1.10	
CAP**3617A**	1.01	1.10	
CAP**3619A**	1.01	1.10	
CAP**3621A**	1.01	1.10	
CAP**4221A**	1.01	1.09	
CAP**4224A**	1.01	1.09	
CNPF*3618A**	1.01	1.10	
CNPH*3617A**	1.01	1.10	
CNPH*4221A**	1.01	1.08	
CNPV*3617A**	1.01	1.10	
CNPV*3621A**	1.01	1.10	
CNPV*3717A**	1.02	1.04	
CNPV*4217A**	1.02	1.07	
CNPV*4221A**	1.01	1.08	
CNPV*4324A**	1.02	1.04	
CSPH*3612A**	1.01	1.06	
CSPH*4212A**	1.01	1.05	
CAP**3614A**	0.98	1.06	58CV(A,X)070−12
CNPH*3617A**	0.98	1.06	58CV(A,X)070−12
CNPH*4221A**	0.98	1.05	58CV(A,X)070−12

HEATING INDOOR MODEL	CAPACITY	POWER	FURNACE MODEL
CSPH*3612A**	0.98	1.03	58CV(A X)070−12
CSPH*4212A**	0.99	1.03	58CV(A X)070−12
CAP**3617A**	0.97	1.04	58CV(A X)090−16
CNPH*3617A**	0.97	1.05	58CV(A X)090−16
CNPH*4221A**	0.98	1.03	58CV(A X)090−16
CNPV*3617A**	0.97	1.05	58CV(A X)090−16
CNPV*3717A**	0.99	0.99	58CV(A X)090−16
CNPV*4217A**	0.98	1.02	58CV(A X)090−16
CSPH*3612A**	0.98	1.02	58CV(A X)090−16
CSPH*4212A**	0.98	1.01	58CV(A X)090−16
CAP**3621A**	0.97	1.03	58CV(A X)110−20
CAP**4221A**	0.98	1.03	58CV(A X)110−20
CNPH*3617A**	0.97	1.04	58CV(A X)110−20
CNPH*4221A**	0.98	1.03	58CV(A X)110−20
CNPV*3621A**	0.97	1.04	58CV(A X)110−20
CNPV*4221A**	0.98	1.03	58CV(A X)110−20
CSPH*3612A**	0.98	1.01	58CV(A X)110−20
CSPH*4212A**	0.98	1.00	58CV(A X)110−20
CAP**4224A**	0.97	1.02	58CV(A X)135−22
CNPH*3617A**	0.97	1.04	58CV(A X)135−22
CNPH*4221A**	0.97	1.02	58CV(A X)135−22
CNPV*4324A**	0.98	0.97	58CV(A X)135−22
CSPH*3612A**	0.98	1.01	58CV(A X)135−22
CSPH*4212A**	0.98	1.00	58CV(A X)135−22
CAP**4224A**	0.97	1.01	58CV(A X)155−22
CNPH*3617A**	0.97	1.04	58CV(A X)155−22
CNPH*4221A**	0.97	1.01	58CV(A X)155−22
CNPV*4324A**	0.98	0.97	58CV(A X)155−22
CSPH*3612A**	0.98	1.00	58CV(A X)155−22
CSPH*4212A**	0.98	0.99	58CV(A X)155−22
CAP**3619A**	0.99	1.10	58HDV040−−12
CAP**3619A**	0.99	1.10	58HDV040−−12
CAP**3619A**	0.99	1.07	58HDV060−−12
CAP**3619A**	0.99	1.07	58HDV060−−12
CAP**4224A**	0.99	1.02	58HDV100−−20
CNPV*4324A**	1.01	0.98	58HDV100−−20
CAP**3617A**	0.98	1.03	58ME(B,C)040−12
CNPH*3617A**	0.98	1.04	58ME(B,C)040−12
CNPH*4221A**	0.98	1.02	58ME(B,C)040−12
CNPV*3617A**	0.98	1.04	58ME(B,C)040−12
CNPV*3717A**	0.99	0.98	58ME(B,C)040−12
CNPV*4217A**	0.99	1.01	58ME(B,C)040−12
CSPH*3612A**	0.99	1.01	58ME(B,C)040−12
CSPH*4212A**	0.99	1.00	58ME(B,C)040−12

HEATING INDOOR MODEL	CAPACITY	POWER	FURNACE MODEL
CAP**3617A**	0.98	1.04	58ME(B,C)060−12
CNPH*3617A**	0.98	1.04	58ME(B,C)060−12
CNPH*4221A**	0.98	1.02	58ME(B,C)060−12
CNPV*3617A**	0.98	1.04	58ME(B,C)060−12
CNPV*3717A**	1.00	0.99	58ME(B,C)060−12
CNPV*4217A**	0.99	1.01	58ME(B,C)060−12
CSPH*3612A**	0.99	1.01	58ME(B,C)060−12
CSPH*4212A**	0.99	1.00	58ME(B,C)060−12
CAP**3617A**	0.98	1.04	58ME(B,C)080−12
CNPH*3617A**	0.98	1.05	58ME(B,C)080−12
CNPH*4221A**	0.98	1.03	58ME(B,C)080−12
CNPV*3617A**	0.98	1.05	58ME(B,C)080−12
CNPV*3717A**	0.99	0.99	58ME(B,C)080−12
CNPV*4217A**	0.99	1.02	58ME(B,C)080−12
CSPH*3612A**	0.99	1.01	58ME(B,C)080−12
CSPH*4212A**	0.99	1.00	58ME(B,C)080−12
CAP**3617A**	0.98	1.04	58ME(B,C)080−16
CNPH*3617A**	0.98	1.04	58ME(B,C)080−16
CNPH*4221A**	0.98	1.02	58ME(B,C)080−16
CNPV*3617A**	0.98	1.04	58ME(B,C)080−16
CNPV*3717A**	1.00	0.99	58ME(B,C)080−16
CNPV*4217A**	0.99	1.02	58ME(B,C)080−16
CSPH*3612A**	0.98	1.00	58ME(B,C)080−16
CSPH*4212A**	0.99	1.00	58ME(B,C)080−16
CAP**3621A**	0.97	1.02	58ME(B,C)100−20
CAP**4221A**	0.98	1.01	58ME(B,C)100−20
CNPH*3617A**	0.97	1.04	58ME(B,C)100−20
CNPH*4221A**	0.98	1.02	58ME(B,C)100−20
CNPV*3621A**	0.97	1.04	58ME(B,C)100−20
CNPV*4221A**	0.98	1.02	58ME(B,C)100−20
CSPH*3612A**	0.98	1.01	58ME(B,C)100−20
CSPH*4212A**	0.98	0.99	58ME(B,C)100−20
CAP**3617A**	0.98	1.04	58MV(B,C)060−14
CNPH*3617A**	0.98	1.05	58MV(B,C)060−14
CNPH*4221A**	0.98	1.03	58MV(B,C)060−14
CNPV*3617A**	0.98	1.05	58MV(B,C)060−14
CNPV*3717A**	0.99	0.99	58MV(B,C)060−14
CNPV*4217A**	0.99	1.02	58MV(B,C)060−14
CSPH*3612A**	0.99	1.02	58MV(B,C)060−14
CSPH*4212A**	0.99	1.00	58MV(B,C)060−14
CAP**3621A**	0.98	1.05	58MV(B,C)080−14
CAP**4221A**	0.98	1.04	58MV(B,C)080−14
CNPH*3617A**	0.98	1.06	58MV(B,C)080−14
CNPH*4221A**	0.98	1.04	58MV(B,C)080−14

HEAT PUMP HEATING PERFORMANCE CONTINUED

25HBC536A30 Outdoor Section With FX4DNF037 Indoor Section**

HEATING INDOOR MODEL	CAPACITY	POWER	FURNACE MODEL
CNPV*3621A**	0.98	1.06	58MV(B,C)080–14
CNPV*4221A**	0.98	1.04	58MV(B,C)080–14
CNPV*4324A**	0.99	1.00	58MV(B,C)080–14
CNPV*4821A**	0.99	1.02	58MV(B,C)080–14
CNPV*6024A**	0.99	1.00	58MV(B,C)080–14
CSPH*3612A**	0.99	1.03	58MV(B,C)080–14
CSPH*4212A**	0.99	1.02	58MV(B,C)080–14
CAP**3621A**	0.97	1.04	58MV(B,C)080–20
CAP**4221A**	0.98	1.04	58MV(B,C)080–20
CNPH*3617A**	0.97	1.05	58MV(B,C)080–20
CNPH*4221A**	0.98	1.04	58MV(B,C)080–20
CNPV*3621A**	0.97	1.05	58MV(B,C)080–20
CNPV*4221A**	0.98	1.04	58MV(B,C)080–20
CNPV*4324A**	0.99	0.99	58MV(B,C)080–20
CSPH*3612A**	0.98	1.02	58MV(B,C)080–20
CSPH*4212A**	0.99	1.02	58MV(B,C)080–20
CAP**3621A**	0.98	1.04	58MV(B,C)100–20
CAP**4221A**	0.98	1.03	58MV(B,C)100–20
CNPH*3617A**	0.98	1.05	58MV(B,C)100–20
CNPH*4221A**	0.98	1.03	58MV(B,C)100–20
CNPV*3621A**	0.98	1.05	58MV(B,C)100–20
CNPV*4221A**	0.98	1.03	58MV(B,C)100–20
CSPH*3612A**	0.99	1.02	58MV(B,C)100–20
CSPH*4212A**	0.99	1.01	58MV(B,C)100–20
CAP**4224A**	0.97	1.02	58MV(B,C)120–20
CNPH*3617A**	0.97	1.05	58MV(B,C)120–20
CNPH*4221A**	0.97	1.02	58MV(B,C)120–20
CNPV*4324A**	0.99	0.98	58MV(B,C)120–20
CSPH*3612A**	0.98	1.02	58MV(B,C)120–20
CSPH*4212A**	0.98	1.00	58MV(B,C)120–20
CAP**4224A**	0.98	1.04	58MVB040–14
CNPH*3617A**	0.98	1.07	58MVB040–14
CNPH*4221A**	0.98	1.05	58MVB040–14
CNPV*4324A**	0.99	1.00	58MVB040–14
CSPH*3612A**	0.99	1.04	58MVB040–14
CSPH*4212A**	0.99	1.03	58MVB040–14
CAP**3614A**	0.99	1.09	58PH*045–08
CNPH*3617A**	0.99	1.09	58PH*045–08
CNPH*4221A**	0.99	1.07	58PH*045–08
CSPH*3612A**	1.00	1.06	58PH*045–08
CSPH*4212A**	1.01	1.05	58PH*045–08
CAP**3617A**	0.98	1.06	58PH*070–16
CNPH*3617A**	0.98	1.07	58PH*070–16
CNPH*4221A**	0.99	1.05	58PH*070–16
CNPV*3617A**	0.98	1.07	58PH*070–16
CNPV*3717A**	1.00	1.01	58PH*070–16
CNPV*4217A**	0.99	1.04	58PH*070–16
CSPH*3612A**	0.99	1.04	58PH*070–16
CSPH*4212A**	0.99	1.03	58PH*070–16
CAP**3621A**	0.98	1.02	58PH*090–16
CAP**4221A**	0.98	1.01	58PH*090–16
CNPH*3617A**	0.98	1.04	58PH*090–16
CNPH*4221A**	0.98	1.02	58PH*090–16
CNPV*3621A**	0.98	1.04	58PH*090–16
CNPV*4221A**	0.98	1.02	58PH*090–16
CSPH*3612A**	0.99	1.01	58PH*090–16
CSPH*4212A**	0.99	0.99	58PH*090–16
CAP**3621A**	0.98	1.02	58PH*110–20
CAP**4221A**	0.98	1.01	58PH*110–20

HEATING INDOOR MODEL	CAPACITY	POWER	FURNACE MODEL
CNPH*3617A**	0.98	1.03	58PH*110--20
CNPH*4221A**	0.98	1.01	58PH*110--20
CNPV*3621A**	0.98	1.03	58PH*110--20
CNPV*4221A**	0.98	1.01	58PH*110--20
CSPH*3612A**	0.99	1.00	58PH*110--20
CSPH*4212A**	0.99	0.98	58PH*110--20
CAP**3617A**	0.98	1.08	59*N*A060V17**14
CAP**3619A**	0.98	1.08	59*N*A060V17**14
CAP**3621A**	0.98	1.08	59*N*A060V17**14
CAP**4221A**	0.98	1.07	59*N*A060V17**14
CNPH*3617A**	0.98	1.09	59*N*A060V17**14
CNPH*4221A**	0.98	1.07	59*N*A060V17**14
CNPH*4321A**	0.99	1.03	59*N*A060V17**14
CNPV*3617A**	0.98	1.09	59*N*A060V17**14
CNPV*3621A**	0.98	1.09	59*N*A060V17**14
CNPV*3717A**	0.99	1.03	59*N*A060V17**14
CNPV*4217A**	0.99	1.06	59*N*A060V17**14
CNPV*4221A**	0.98	1.07	59*N*A060V17**14
CSPH*3612A**	0.99	1.06	59*N*A060V17**14
CSPH*4212A**	0.99	1.05	59*N*A060V17**14
CAP**3617A**	0.98	1.07	59*N*A080V17**14
CAP**3619A**	0.98	1.07	59*N*A080V17**14
CAP**3621A**	0.98	1.06	59*N*A080V17**14
CAP**4221A**	0.98	1.05	59*N*A080V17**14
CNPH*3617A**	0.98	1.08	59*N*A080V17**14
CNPH*4221A**	0.98	1.06	59*N*A080V17**14
CNPH*4321A**	0.99	1.01	59*N*A080V17**14
CNPV*3617A**	0.98	1.08	59*N*A080V17**14
CNPV*3621A**	0.98	1.08	59*N*A080V17**14
CNPV*3717A**	0.99	1.02	59*N*A080V17**14
CNPV*4217A**	0.98	1.05	59*N*A080V17**14
CNPV*4221A**	0.98	1.06	59*N*A080V17**14
CSPH*3612A**	0.98	1.04	59*N*A080V17**14
CSPH*4212A**	0.99	1.04	59*N*A080V17**14
CAP**3619A**	0.98	1.06	59*N*A100V21**20
CAP**3621A**	0.98	1.05	59*N*A100V21**20
CAP**4221A**	0.98	1.05	59*N*A100V21**20
CAP**4224A**	0.98	1.05	59*N*A100V21**20
CNPH*3617A**	0.98	1.08	59*N*A100V21**20
CNPH*4221A**	0.98	1.05	59*N*A100V21**20
CNPH*4321A**	0.99	1.01	59*N*A100V21**20
CNPV*3621A**	0.98	1.06	59*N*A100V21**20
CNPV*4221A**	0.98	1.05	59*N*A100V21**20
CNPV*4324A**	0.99	1.00	59*N*A100V21**20
CSPH*3612A**	0.99	1.04	59*N*A100V21**20
CSPH*4212A**	0.99	1.03	59*N*A100V21**20
CAP**4224A**	0.98	1.04	59*N*A120V24**22
CNPH*3617A**	0.98	1.06	59*N*A120V24**22
CNPH*4221A**	0.98	1.05	59*N*A120V24**22
CNPH*4321A**	0.99	1.00	59*N*A120V24**22
CNPV*4324A**	0.99	0.99	59*N*A120V24**22
CSPH*3612A**	0.98	1.02	59*N*A120V24**22
CSPH*4212A**	0.99	1.02	59*N*A120V24**22
CAP**3617A**	0.99	1.07	59*P5A060E17**14
CAP**3619A**	0.99	1.07	59*P5A060E17**14
CAP**3621A**	0.99	1.06	59*P5A060E17**14
CAP**4221A**	0.99	1.06	59*P5A060E17**14
CNPH*3617A**	0.99	1.08	59*P5A060E17**14
CNPH*4221A**	0.99	1.06	59*P5A060E17**14

HEATING INDOOR MODEL	CAPACITY	POWER	FURNACE MODEL
CNPH*4321A**	1.01	1.02	59*P5A060E17**14
CNPV*3617A**	0.99	1.08	59*P5A060E17**14
CNPV*3621A**	0.99	1.08	59*P5A060E17**14
CNPV*3717A**	1.01	1.02	59*P5A060E17**14
CNPV*4217A**	1.00	1.05	59*P5A060E17**14
CNPV*4221A**	0.99	1.06	59*P5A060E17**14
CSPH*3612A**	1.00	1.05	59*P5A060E17**14
CSPH*4212A**	1.00	1.04	59*P5A060E17**14
CAP**3617A**	0.98	1.06	59*P5A080E17**16
CAP**3619A**	0.98	1.06	59*P5A080E17**16
CAP**3621A**	0.98	1.06	59*P5A080E17**16
CAP**4221A**	0.98	1.05	59*P5A080E17**16
CNPH*3617A**	0.98	1.07	59*P5A080E17**16
CNPH*4221A**	0.98	1.05	59*P5A080E17**16
CNPH*4321A**	1.00	1.01	59*P5A080E17**16
CNPV*3617A**	0.98	1.07	59*P5A080E17**16
CNPV*3621A**	0.98	1.06	59*P5A080E17**16
CNPV*3717A**	1.00	1.02	59*P5A080E17**16
CNPV*4217A**	0.99	1.04	59*P5A080E17**16
CNPV*4221A**	0.98	1.05	59*P5A080E17**16
CSPH*3612A**	0.99	1.04	59*P5A080E17**16
CSPH*4212A**	0.99	1.03	59*P5A080E17**16

See note on pg. 60

HEAT PUMP HEATING PERFORMANCE CONTINUED

INDOOR AIR		OUTDOOR COIL ENTERING AIR TEMPERATURES °F (°C)																							
		−3 (−19.4)			7 (−13.9)			17 (−8.3)			27 (−2.8)			37 (2.8)			47 (8.3)			57 (13.9)			67 (19.4)		
EDB °F (°C)	CFM	Capacity MBtuh		Total Syst. KW†	Capacity MBtuh		Total Syst. KW†	Capacity MBtuh		Total Syst. KW†	Capacity MBtuh		Total Syst. KW†	Capacity MBtuh		Total Syst. KW†	Capacity MBtuh		Total Syst. KW†	Capacity MBtuh		Total Syst. KW†	Capacity MBtuh		Total Syst. KW†
		Total	Integ*		Total	Integ*		Total	Integ*		Total	Integ*		Total	Integ*		Total	Integ*		Total	Integ*		Total	Integ*	
25HBC542A**30 Outdoor Section With FX4DNF043 Indoor Section																									
65 (18.3)	1225	15.59	14.35	2.29	20.20	18.56	2.45	25.92	23.63	2.65	30.84	27.39	2.83	36.17	32.92	3.00	42.10	42.10	3.16	48.79	48.79	3.32	56.67	56.67	3.45
	1400	15.85	14.58	2.30	20.53	18.87	2.46	26.26	23.95	2.65	31.19	27.70	2.82	36.63	33.33	2.97	42.66	42.66	3.12	49.49	49.49	3.26	57.34	57.34	3.36
	1575	16.10	14.81	2.31	20.82	19.13	2.47	26.55	24.21	2.66	31.50	27.98	2.82	37.01	33.68	2.96	43.12	43.12	3.10	50.13	50.13	3.21	57.72	57.72	3.30
70 (21.1)	1225	14.91	13.71	2.42	19.56	17.97	2.58	24.56	22.39	2.75	30.36	26.97	2.95	35.61	32.40	3.12	41.46	41.46	3.29	48.00	48.00	3.46	55.78	55.78	3.61
	1400	15.19	13.98	2.43	19.88	18.27	2.58	24.93	22.73	2.74	30.71	27.27	2.94	36.05	32.81	3.09	42.00	42.00	3.25	48.69	48.69	3.40	56.54	56.54	3.51
	1575	15.44	14.20	2.45	20.17	18.54	2.59	25.36	23.13	2.75	31.04	27.56	2.93	36.43	33.15	3.08	42.45	42.45	3.22	49.27	49.27	3.37	56.99	56.99	3.45
75 (23.9)	1225	14.21	13.08	2.57	18.88	17.35	2.71	23.85	21.74	2.87	29.87	26.53	3.08	35.07	31.91	3.25	40.82	40.82	3.43	47.26	47.26	3.61	54.86	54.86	3.79
	1400	14.48	13.32	2.58	19.21	17.65	2.71	24.24	22.10	2.87	30.24	26.86	3.06	35.49	32.30	3.22	41.35	41.35	3.38	47.91	47.91	3.55	55.73	55.73	3.68
	1575	14.73	13.55	2.59	19.49	17.91	2.72	24.58	22.41	2.87	30.53	27.11	3.06	35.86	32.63	3.21	41.79	41.79	3.36	48.46	48.46	3.51	56.22	56.22	3.62

HEATING INDOOR MODEL	CAPACITY	POWER	FURNACE MODEL
*FX4DN(B F)043	1.00	1.00	
FB4CNF042	1.01	1.02	
FB4CNF048	1.01	1.01	
FE4AN(B,F)003	1.01	1.05	
FE4AN(B,F)005	1.01	0.99	
FE4ANB006	1.01	0.96	
FV4BN(B,F)003	1.01	1.05	
FV4BN(B,F)005	1.01	0.99	
FV4BNB006	1.01	0.96	
FV4CN(B,F)003	1.01	1.05	
FV4CN(B,F)005	1.01	0.99	
FV4CNB006	1.01	0.96	
FX4CN(B,F)042	1.01	1.02	
FX4CN(B,F)048	1.01	0.99	
FX4DN(B,F)049	1.01	0.98	
FY4ANF042	1.01	1.06	
FY4ANF048	1.01	1.04	
FY5BNF042	1.01	1.03	
FY5BNF048	1.01	1.01	
CAP**4221A**	1.01	1.07	
CAP**4224A**	1.01	1.07	
CAP**4817A**	1.01	1.02	
CAP**4821A**	1.01	1.03	
CAP**4823A**	1.01	1.03	
CAP**4824A**	1.01	1.03	
CNPF*4818A**	1.01	1.05	
CNPH*4221A**	1.01	1.06	
CNPH*4821A**	1.01	1.03	
CNPV*4217A**	1.01	1.05	
CNPV*4221A**	1.01	1.06	
CNPV*4324A**	1.01	1.01	
CNPV*4821A**	1.01	1.03	
CNPV*4824A**	1.01	1.03	
CSPH*4212A**	1.01	1.03	
CSPH*4812A**	1.01	1.02	
CNPH*4221A**	1.01	1.07	58CV(A,X)070−12
CNPH*4821A**	1.01	1.04	58CV(A,X)070−12
CSPH*4212A**	1.01	1.04	58CV(A,X)070−12
CSPH*4812A**	1.01	1.03	58CV(A,X)070−12
CAP**4817A**	1.01	1.01	58CV(A,X)090−16
CNPH*4221A**	1.01	1.06	58CV(A,X)090−16
CNPH*4821A**	1.01	1.02	58CV(A,X)090−16
CNPV*4217A**	1.01	1.04	58CV(A,X)090−16
CSPH*4212A**	1.01	1.02	58CV(A,X)090−16

HEATING INDOOR MODEL	CAPACITY	POWER	FURNACE MODEL
CSPH*4812A**	1.01	1.01	58CV(A X)090−16
CAP**4221A**	1.01	1.05	58CV(A X)110−20
CAP**4821A**	1.01	1.02	58CV(A X)110−20
CNPH*4221A**	1.01	1.05	58CV(A X)110−20
CNPH*4821A**	1.01	1.02	58CV(A X)110−20
CNPV*4221A**	1.01	1.05	58CV(A X)110−20
CNPV*4324A**	1.01	0.99	58CV(A X)110−20
CNPV*4821A**	1.01	1.02	58CV(A X)110−20
CSPH*4212A**	1.01	1.02	58CV(A X)110−20
CSPH*4812A**	1.01	1.01	58CV(A X)110−20
CAP**4224A**	1.00	1.03	58CV(A X)135−22
CAP**4824A**	1.01	1.01	58CV(A X)135−22
CNPH*4221A**	1.01	1.05	58CV(A X)135−22
CNPH*4821A**	1.01	1.01	58CV(A X)135−22
CNPV*4324A**	1.01	0.98	58CV(A X)135−22
CNPV*4824A**	1.01	1.01	58CV(A X)135−22
CSPH*4212A**	1.01	1.01	58CV(A X)135−22
CSPH*4812A**	1.01	1.00	58CV(A X)135−22
CAP**4224A**	1.00	1.03	58CV(A X)155−22
CAP**4824A**	1.01	1.01	58CV(A X)155−22
CNPH*4221A**	1.01	1.05	58CV(A X)155−22
CNPH*4821A**	1.01	1.01	58CV(A X)155−22
CNPV*4324A**	1.01	0.98	58CV(A X)155−22
CNPV*4824A**	1.01	1.01	58CV(A X)155−22
CSPH*4212A**	1.01	1.01	58CV(A X)155−22
CSPH*4812A**	1.01	1.00	58CV(A X)155−22
CAP**4823A**	1.01	1.01	58HDV080−−20
CAP**4224A**	1.01	1.04	58HDV100−−20
CAP**4817A**	1.01	1.00	58ME(B,C)040−12
CNPH*4221A**	1.01	1.05	58ME(B,C)040−12
CNPH*4821A**	1.01	1.01	58ME(B,C)040−12
CNPV*4217A**	1.01	1.03	58ME(B,C)040−12
CSPH*4212A**	1.01	1.01	58ME(B,C)040−12
CSPH*4812A**	1.01	1.00	58ME(B,C)040−12
CAP**4817A**	1.01	1.01	58ME(B,C)060−12
CNPH*4221A**	1.01	1.05	58ME(B,C)060−12
CNPH*4821A**	1.01	1.01	58ME(B,C)060−12
CNPV*4217A**	1.01	1.04	58ME(B,C)060−12
CSPH*4212A**	1.01	1.01	58ME(B,C)060−12
CSPH*4812A**	1.01	1.01	58ME(B,C)060−12
CAP**4817A**	1.01	1.00	58ME(B,C)080−12
CNPH*4221A**	1.01	1.05	58ME(B,C)080−12
CNPH*4821A**	1.01	1.01	58ME(B,C)080−12
CNPV*4217A**	1.01	1.03	58ME(B,C)080−12

HEATING INDOOR MODEL	CAPACITY	POWER	FURNACE MODEL
CSPH*4212A**	1.01	1.01	58ME(B,C)080−12
CSPH*4812A**	1.01	1.00	58ME(B,C)080−12
CAP**4817A**	1.01	1.01	58ME(B,C)080−16
CNPH*4221A**	1.01	1.06	58ME(B,C)080−16
CNPH*4821A**	1.01	1.02	58ME(B,C)080−16
CNPV*4217A**	1.01	1.04	58ME(B,C)080−16
CSPH*4212A**	1.01	1.02	58ME(B,C)080−16
CSPH*4812A**	1.01	1.01	58ME(B,C)080−16
CAP**4221A**	1.01	1.04	58ME(B,C)100−20
CAP**4821A**	1.01	1.01	58ME(B,C)100−20
CNPH*4221A**	1.01	1.04	58ME(B,C)100−20
CNPH*4821A**	1.01	1.00	58ME(B,C)100−20
CNPV*4221A**	1.01	1.04	58ME(B,C)100−20
CNPV*4821A**	1.01	1.00	58ME(B,C)100−20
CSPH*4212A**	1.01	1.01	58ME(B,C)100−20
CSPH*4812A**	1.01	1.00	58ME(B,C)100−20
CAP**4224A**	1.01	1.03	58ME(B,C)120−20
CAP**4824A**	1.01	1.00	58ME(B,C)120−20
CNPH*4221A**	1.01	1.04	58ME(B,C)120−20
CNPH*4821A**	1.01	0.99	58ME(B,C)120−20
CNPV*4324A**	1.01	0.97	58ME(B,C)120−20
CNPV*4824A**	1.01	0.99	58ME(B,C)120−20
CSPH*4212A**	1.01	1.00	58ME(B,C)120−20
CSPH*4812A**	1.01	0.99	58ME(B,C)120−20
CAP**4817A**	1.01	1.01	58MV(B,C)060−14
CNPH*4221A**	1.01	1.05	58MV(B,C)060−14
CNPH*4821A**	1.01	1.02	58MV(B,C)060−14
CNPV*4217A**	1.01	1.04	58MV(B,C)060−14
CSPH*4212A**	1.01	1.02	58MV(B,C)060−14
CSPH*4812A**	1.01	1.01	58MV(B,C)060−14
CAP**4221A**	1.01	1.07	58MV(B,C)080−14
CAP**4821A**	1.01	1.04	58MV(B,C)080−14
CNPH*4221A**	1.01	1.07	58MV(B,C)080−14
CNPH*4821A**	1.01	1.03	58MV(B,C)080−14
CNPV*4221A**	1.01	1.07	58MV(B,C)080−14
CNPV*4821A**	1.01	1.03	58MV(B,C)080−14
CSPH*4212A**	1.01	1.04	58MV(B,C)080−14
CSPH*4812A**	1.01	1.03	58MV(B,C)080−14
CAP**4221A**	1.01	1.06	58MV(B,C)080−20
CAP**4821A**	1.01	1.03	58MV(B,C)080−20
CNPH*4221A**	1.01	1.06	58MV(B,C)080−20
CNPH*4821A**	1.01	1.03	58MV(B,C)080−20
CNPV*4221A**	1.01	1.06	58MV(B,C)080−20
CNPV*4821A**	1.01	1.03	58MV(B,C)080−20

HEAT PUMP HEATING PERFORMANCE CONTINUED

25HBC542A30 Outdoor Section With FX4DNF043 Indoor Section**

HEATING INDOOR MODEL	CAPACITY	POWER	FURNACE MODEL
CSPH*4212A**	1.01	1.03	58MV(B,C)080–20
CSPH*4812A**	1.01	1.02	58MV(B,C)080–20
CAP**4221A**	1.01	1.07	58MV(B,C)100–20
CAP**4821A**	1.01	1.04	58MV(B,C)100–20
CNPH*4221A**	1.01	1.07	58MV(B,C)100–20
CNPH*4821A**	1.01	1.03	58MV(B,C)100–20
CNPV*4221A**	1.01	1.07	58MV(B,C)100–20
CNPV*4324A**	1.01	1.01	58MV(B,C)100–20
CNPV*4821A**	1.01	1.03	58MV(B,C)100–20
CSPH*4212A**	1.01	1.04	58MV(B,C)100–20
CSPH*4812A**	1.01	1.03	58MV(B,C)100–20
CAP**4224A**	1.01	1.05	58MV(B,C)120–20
CAP**4824A**	1.01	1.02	58MV(B,C)120–20
CNPH*4221A**	1.01	1.06	58MV(B,C)120–20
CNPH*4821A**	1.01	1.02	58MV(B,C)120–20
CNPV*4324A**	1.01	0.99	58MV(B,C)120–20
CNPV*4824A**	1.01	1.02	58MV(B,C)120–20
CSPH*4212A**	1.01	1.02	58MV(B,C)120–20
CSPH*4812A**	1.01	1.01	58MV(B,C)120–20
CAP**4224A**	1.01	1.07	58MVB040–14
CAP**4824A**	1.01	1.04	58MVB040–14
CNPH*4221A**	1.01	1.07	58MVB040–14
CNPH*4821A**	1.01	1.04	58MVB040–14
CNPV*4324A**	1.01	1.01	58MVB040–14
CNPV*4824A**	1.01	1.04	58MVB040–14
CSPH*4212A**	1.01	1.04	58MVB040–14
CSPH*4812A**	1.01	1.03	58MVB040–14
CAP**4817A**	1.01	1.03	58PH*070–16
CNPH*4221A**	1.01	1.07	58PH*070–16
CNPH*4821A**	1.01	1.04	58PH*070–16
CNPV*4217A**	1.01	1.06	58PH*070–16
CSPH*4212A**	1.01	1.04	58PH*070–16
CSPH*4812A**	1.01	1.03	58PH*070–16
CAP**4221A**	1.01	1.05	58PH*090–16
CAP**4821A**	1.01	1.02	58PH*090–16
CNPH*4221A**	1.01	1.05	58PH*090–16
CNPH*4821A**	1.01	1.01	58PH*090–16
CNPV*4221A**	1.01	1.05	58PH*090–16
CNPV*4821A**	1.01	1.01	58PH*090–16
CSPH*4212A**	1.01	1.01	58PH*090–16
CSPH*4812A**	1.01	1.01	58PH*090–16
CAP**4221A**	1.01	1.04	58PH*110–20
CAP**4821A**	1.01	1.01	58PH*110–20
CNPH*4221A**	1.01	1.05	58PH*110–20
CNPH*4821A**	1.01	1.00	58PH*110–20
CNPV*4221A**	1.01	1.05	58PH*110–20
CNPV*4324A**	1.01	0.97	58PH*110–20
CNPV*4821A**	1.01	1.00	58PH*110–20
CSPH*4212A**	1.01	1.01	58PH*110–20
CSPH*4812A**	1.01	1.00	58PH*110–20
CAP**4224A**	1.01	1.04	58PH*135–20
CAP**4824A**	1.01	1.01	58PH*135–20
CNPH*4221A**	1.01	1.05	58PH*135–20
CNPH*4821A**	1.01	1.01	58PH*135–20
CNPV*4324A**	1.01	0.98	58PH*135–20
CNPV*4824A**	1.01	1.01	58PH*135–20
CSPH*4212A**	1.01	1.01	58PH*135–20
CSPH*4812A**	1.01	1.01	58PH*135–20
CAP**4221A**	0.98	1.05	59*N*A060V17**14

HEATING INDOOR MODEL	CAPACITY	POWER	FURNACE MODEL
CAP**4817A**	0.98	1.01	59*N*A060V17**14
CAP**4821A**	0.98	1.03	59*N*A060V17**14
CNPH*4221A**	0.98	1.05	59*N*A060V17**14
CNPH*4321A**	0.98	1.00	59*N*A060V17**14
CNPH*4821A**	0.98	1.02	59*N*A060V17**14
CNPV*4217A**	0.98	1.04	59*N*A060V17**14
CNPV*4221A**	0.98	1.05	59*N*A060V17**14
CNPV*4821A**	0.98	1.02	59*N*A060V17**14
CSPH*4212A**	0.98	1.02	59*N*A060V17**14
CSPH*4812A**	0.98	1.01	59*N*A060V17**14
CAP**4221A**	0.98	1.04	59*N*A080V17**14
CAP**4817A**	0.98	1.00	59*N*A080V17**14
CAP**4821A**	0.98	1.01	59*N*A080V17**14
CNPH*4221A**	0.98	1.05	59*N*A080V17**14
CNPH*4321A**	0.98	0.99	59*N*A080V17**14
CNPH*4821A**	0.98	1.01	59*N*A080V17**14
CNPV*4217A**	0.98	1.03	59*N*A080V17**14
CNPV*4221A**	0.98	1.05	59*N*A080V17**14
CNPV*4821A**	0.98	1.01	59*N*A080V17**14
CSPH*4212A**	0.98	1.01	59*N*A080V17**14
CSPH*4812A**	0.98	1.00	59*N*A080V17**14
CAP**4221A**	0.98	1.04	59*N*A100V21**20
CAP**4224A**	0.98	1.03	59*N*A100V21**20
CAP**4821A**	0.98	1.00	59*N*A100V21**20
CAP**4823A**	0.98	1.00	59*N*A100V21**20
CAP**4824A**	0.98	1.00	59*N*A100V21**20
CNPH*4221A**	0.98	1.04	59*N*A100V21**20
CNPH*4321A**	0.98	0.98	59*N*A100V21**20
CNPH*4821A**	0.98	1.00	59*N*A100V21**20
CNPV*4221A**	0.98	1.04	59*N*A100V21**20
CNPV*4324A**	0.98	0.98	59*N*A100V21**20
CNPV*4821A**	0.98	1.00	59*N*A100V21**20
CNPV*4824A**	0.98	1.00	59*N*A100V21**20
CSPH*4212A**	0.98	1.00	59*N*A100V21**20
CSPH*4812A**	0.98	1.00	59*N*A100V21**20
CAP**4224A**	0.97	1.01	59*N*A120V24**22
CAP**4823A**	0.98	1.00	59*N*A120V24**22
CAP**4824A**	0.98	1.00	59*N*A120V24**22
CNPH*4221A**	0.98	1.03	59*N*A120V24**22
CNPH*4321A**	0.98	0.97	59*N*A120V24**22
CNPH*4821A**	0.98	0.99	59*N*A120V24**22
CNPV*4324A**	0.98	0.97	59*N*A120V24**22
CNPV*4824A**	0.98	0.99	59*N*A120V24**22
CSPH*4212A**	0.98	1.00	59*N*A120V24**22
CSPH*4812A**	0.98	0.99	59*N*A120V24**22
CAP**4221A**	0.98	1.04	59*P5A060E17**14
CAP**4817A**	0.98	1.00	59*P5A060E17**14
CAP**4821A**	0.98	1.01	59*P5A060E17**14
CNPH*4221A**	0.98	1.04	59*P5A060E17**14
CNPH*4321A**	0.98	0.98	59*P5A060E17**14
CNPH*4821A**	0.98	1.00	59*P5A060E17**14
CNPV*4217A**	0.98	1.03	59*P5A060E17**14
CNPV*4221A**	0.98	1.04	59*P5A060E17**14
CNPV*4821A**	0.98	1.00	59*P5A060E17**14
CSPH*4212A**	0.98	1.01	59*P5A060E17**14
CSPH*4812A**	0.98	1.00	59*P5A060E17**14
CAP**4221A**	0.98	1.03	59*P5A080E17**16
CAP**4817A**	0.98	0.99	59*P5A080E17**16
CAP**4821A**	0.98	1.00	59*P5A080E17**16

HEATING INDOOR MODEL	CAPACITY	POWER	FURNACE MODEL
CNPH*4221A**	0.98	1.03	59*P5A080E17**16
CNPH*4321A**	0.98	0.97	59*P5A080E17**16
CNPH*4821A**	0.98	0.99	59*P5A080E17**16
CNPV*4217A**	0.98	1.01	59*P5A080E17**16
CNPV*4221A**	0.98	1.03	59*P5A080E17**16
CNPV*4821A**	0.98	0.99	59*P5A080E17**16
CSPH*4212A**	0.98	1.00	59*P5A080E17**16
CSPH*4812A**	0.98	0.99	59*P5A080E17**16
CAP**4221A**	0.98	1.03	59*P5A100E21**16
CAP**4224A**	0.98	1.03	59*P5A100E21**16
CAP**4821A**	0.98	1.00	59*P5A100E21**16
CAP**4823A**	0.98	1.00	59*P5A100E21**16
CAP**4824A**	0.98	1.00	59*P5A100E21**16
CNPH*4221A**	0.98	1.04	59*P5A100E21**16
CNPH*4321A**	0.98	0.98	59*P5A100E21**16
CNPH*4821A**	0.98	1.00	59*P5A100E21**16
CNPV*4221A**	0.98	1.04	59*P5A100E21**16
CNPV*4324A**	0.98	0.97	59*P5A100E21**16
CNPV*4821A**	0.98	1.00	59*P5A100E21**16
CNPV*4824A**	0.98	1.00	59*P5A100E21**16
CSPH*4212A**	0.98	1.00	59*P5A100E21**16
CSPH*4812A**	0.98	0.99	59*P5A100E21**16
CAP**4224A**	0.98	1.00	59*P5A120E24**22
CAP**4823A**	0.98	0.98	59*P5A120E24**22
CAP**4824A**	0.98	0.97	59*P5A120E24**22
CNPH*4221A**	0.98	1.01	59*P5A120E24**22
CNPH*4321A**	0.98	0.95	59*P5A120E24**22
CNPH*4821A**	0.98	0.97	59*P5A120E24**22
CNPV*4324A**	0.98	0.94	59*P5A120E24**22
CNPV*4824A**	0.98	0.97	59*P5A120E24**22
CSPH*4212A**	0.98	0.98	59*P5A120E24**22
CSPH*4812A**	0.98	0.97	59*P5A120E24**22

See note on pg. 60

HEAT PUMP HEATING PERFORMANCE CONTINUED

INDOOR AIR		OUTDOOR COIL ENTERING AIR TEMPERATURES ° F (° C)																							
		−3 (−19.4)			7 (−13.9)			17 (−8.3)			27 (−2.8)			37 (2.8)			47 (8.3)			57 (13.9)			67 (19.4)		
EDB ° F (° C)	CFM	Capacity MBtuh		Total Syst. KW†	Capacity MBtuh		Total Syst. KW†	Capacity MBtuh		Total Syst. KW†	Capacity MBtuh		Total Syst. KW†	Capacity MBtuh		Total Syst. KW†	Capacity MBtuh		Total Syst. KW†	Capacity MBtuh		Total Syst. KW†	Capacity MBtuh		Total Syst. KW†
		Total	Integ*		Total	Integ*		Total	Integ*		Total	Integ*		Total	Integ*		Total	Integ*		Total	Integ*		Total	Integ*	
25HBC548A**30 Outdoor Section With FX4DNF049 Indoor Section																									
65 (18.3)	1400	16.57	15.24	2.69	21.81	20.04	2.81	27.40	24.99	2.93	34.27	30.44	3.11	40.13	36.52	3.25	46.61	46.61	3.41	54.13	54.13	3.58	62.36	62.36	3.76
	1600	16.86	15.51	2.71	22.16	20.36	2.82	27.81	25.36	2.94	34.67	30.79	3.10	40.59	36.94	3.22	47.18	47.18	3.37	54.95	54.95	3.50	62.79	62.79	3.67
	1800	17.12	15.75	2.74	22.46	20.64	2.85	28.17	25.69	2.95	34.99	31.07	3.10	40.98	37.29	3.21	47.66	47.66	3.34	55.35	55.35	3.45	63.02	63.02	3.60
70 (21.1)	1400	15.87	14.60	2.80	21.11	19.40	2.92	26.66	24.31	3.05	33.71	29.94	3.24	39.54	35.98	3.39	45.93	45.93	3.56	53.20	53.20	3.76	61.54	61.54	3.94
	1600	16.17	14.88	2.82	21.47	19.73	2.93	27.09	24.70	3.06	34.13	30.31	3.23	40.02	36.42	3.37	46.50	46.50	3.52	54.09	54.09	3.66	62.01	62.01	3.84
	1800	16.43	15.12	2.85	21.77	20.01	2.96	27.45	25.03	3.07	34.48	30.63	3.23	40.41	36.77	3.36	46.98	46.98	3.49	54.63	54.63	3.61	62.29	62.29	3.78
75 (23.9)	1400	15.12	13.91	2.92	20.36	18.71	3.04	25.89	23.61	3.18	32.01	28.43	3.34	38.98	35.48	3.54	45.26	45.26	3.72	52.30	52.30	3.93	60.68	60.68	4.11
	1600	15.41	14.18	2.94	20.72	19.04	3.06	26.32	24.00	3.18	32.64	28.99	3.33	39.43	35.88	3.51	45.81	45.81	3.67	53.21	53.21	3.84	61.21	61.21	4.02
	1800	15.68	14.43	2.97	21.03	19.32	3.08	26.68	24.32	3.20	33.89	30.10	3.36	39.81	36.23	3.50	46.28	46.28	3.65	53.84	53.84	3.78	61.52	61.52	3.95

HEATING INDOOR MODEL	CAPACITY	POWER	FURNACE MODEL
*FX4DN(B F)049	1.00	1.00	
FB4CNF048	0.99	1.03	
FB4CNF060	0.99	1.00	
FE4AN(B,F)005	0.97	0.99	
FE4ANB006	0.98	0.97	
FV4BN(B,F)005	0.97	0.99	
FV4BNB006	0.98	0.97	
FV4CN(B,F)005	0.97	0.99	
FV4CNB006	0.98	0.97	
FX4CN(B,F)048	0.99	1.00	
FX4CN(B,F)060	1.00	0.98	
FX4DN(B,F)061	0.99	0.96	
FY4ANB060	1.01	1.04	
FY4ANF048	1.00	1.06	
FY5BNB060	1.01	1.04	
FY5BNF048	0.99	1.01	
CAP**4817A**	0.99	1.04	
CAP**4821A**	1.00	1.05	
CAP**4823A**	1.00	1.05	
CAP**4824A**	1.00	1.05	
CAP**6021A**	1.00	1.03	
CAP**6024A**	1.00	1.03	
CAP**6025A**	1.00	1.03	
CNPF*4818A**	0.98	1.06	
CNPH*4821A**	1.00	1.05	
CNPH*6024A**	1.00	1.04	
CNPH*6124A**	1.01	1.02	
CNPV*4821A**	1.00	1.05	
CNPV*4824A**	1.00	1.05	
CNPV*6024A**	1.00	1.04	
CNPV*6124A**	1.01	1.02	
CSPH*4812A**	1.00	1.03	
CSPH*6012A**	1.00	1.02	
CAP**4817A**	0.98	1.02	58CV(A,X)090−16
CNPH*4821A**	0.97	1.02	58CV(A,X)090−16
CNPH*6024A**	0.97	1.00	58CV(A,X)090−16
CNPH*6124A**	0.98	1.00	58CV(A,X)090−16
CSPH*4812A**	0.98	1.02	58CV(A,X)090−16
CSPH*6012A**	0.98	1.01	58CV(A,X)090−16
CAP**4821A**	0.97	1.02	58CV(A,X)110−20
CAP**6021A**	0.98	1.01	58CV(A,X)110−20
CNPH*4821A**	0.97	1.01	58CV(A,X)110−20
CNPH*6024A**	0.97	1.00	58CV(A,X)110−20
CNPH*6124A**	0.98	1.00	58CV(A,X)110−20

HEATING INDOOR MODEL	CAPACITY	POWER	FURNACE MODEL
CNPV*4821A**	0.97	1.01	58CV(A X)110−20
CNPV*6124A**	0.98	0.99	58CV(A X)110−20
CSPH*4812A**	0.98	1.02	58CV(A X)110−20
CSPH*6012A**	0.98	1.00	58CV(A X)110−20
CAP**4824A**	0.97	1.00	58CV(A X)135−22
CAP**6024A**	0.97	0.99	58CV(A X)135−22
CNPH*4821A**	0.97	1.00	58CV(A X)135−22
CNPH*6024A**	0.97	0.99	58CV(A X)135−22
CNPH*6124A**	0.98	0.99	58CV(A X)135−22
CNPV*4824A**	0.97	1.00	58CV(A X)135−22
CNPV*6024A**	0.97	0.99	58CV(A X)135−22
CNPV*6124A**	0.98	0.98	58CV(A X)135−22
CSPH*4812A**	0.97	1.00	58CV(A X)135−22
CSPH*6012A**	0.97	0.98	58CV(A X)135−22
CAP**4824A**	0.97	1.00	58CV(A X)155−22
CAP**6024A**	0.97	0.98	58CV(A X)155−22
CNPH*4821A**	0.97	0.99	58CV(A X)155−22
CNPH*6024A**	0.97	0.98	58CV(A X)155−22
CNPH*6124A**	0.98	0.98	58CV(A X)155−22
CNPV*4824A**	0.97	0.99	58CV(A X)155−22
CNPV*6024A**	0.97	0.98	58CV(A X)155−22
CNPV*6124A**	0.98	0.97	58CV(A X)155−22
CSPH*4812A**	0.97	0.99	58CV(A X)155−22
CSPH*6012A**	0.97	0.97	58CV(A X)155−22
CAP**4823A**	0.99	1.04	58HDV080−−20
CAP**6025A**	0.98	1.01	58HDV100−−20
CAP**4817A**	0.99	1.03	58ME(B,C)080−16
CNPH*4821A**	0.98	1.02	58ME(B,C)080−16
CNPH*6024A**	0.99	1.02	58ME(B,C)080−16
CNPH*6124A**	0.99	1.00	58ME(B,C)080−16
CSPH*4812A**	0.99	1.03	58ME(B,C)080−16
CSPH*6012A**	0.99	1.01	58ME(B,C)080−16
CAP**4821A**	0.97	1.01	58ME(B,C)100−20
CAP**6021A**	0.98	1.00	58ME(B,C)100−20
CNPH*4821A**	0.97	1.00	58ME(B,C)100−20
CNPH*6024A**	0.98	0.99	58ME(B,C)100−20
CNPH*6124A**	0.98	0.98	58ME(B,C)100−20
CNPV*4821A**	0.97	1.00	58ME(B,C)100−20
CSPH*4812A**	0.98	1.00	58ME(B,C)100−20
CSPH*6012A**	0.98	0.98	58ME(B,C)100−20
CAP**4824A**	0.97	0.99	58ME(B,C)120−20
CAP**6024A**	0.98	0.99	58ME(B,C)120−20
CNPH*4821A**	0.97	0.99	58ME(B,C)120−20
CNPH*6024A**	0.98	0.99	58ME(B,C)120−20

HEATING INDOOR MODEL	CAPACITY	POWER	FURNACE MODEL
CNPH*6124A**	0.98	0.97	58ME(B,C)120−20
CNPV*4824A**	0.97	0.99	58ME(B,C)120−20
CNPV*6024A**	0.98	0.99	58ME(B,C)120−20
CNPV*6124A**	0.98	0.96	58ME(B,C)120−20
CSPH*4812A**	0.98	1.00	58ME(B,C)120−20
CSPH*6012A**	0.98	0.98	58ME(B,C)120−20
CAP**4821A**	0.97	1.03	58MV(B,C)080−20
CAP**6021A**	0.98	1.03	58MV(B,C)080−20
CNPH*4821A**	0.97	1.03	58MV(B,C)080−20
CNPH*6024A**	0.97	1.02	58MV(B,C)080−20
CNPH*6124A**	0.98	1.02	58MV(B,C)080−20
CNPV*4821A**	0.97	1.03	58MV(B,C)080−20
CSPH*4812A**	0.98	1.03	58MV(B,C)080−20
CSPH*6012A**	0.98	1.02	58MV(B,C)080−20
CAP**4821A**	0.98	1.04	58MV(B,C)100−20
CAP**6021A**	0.98	1.02	58MV(B,C)100−20
CNPH*4821A**	0.98	1.03	58MV(B,C)100−20
CNPH*6024A**	0.98	1.02	58MV(B,C)100−20
CNPH*6124A**	0.99	1.01	58MV(B,C)100−20
CNPV*4821A**	0.98	1.03	58MV(B,C)100−20
CNPV*6124A**	0.99	1.00	58MV(B,C)100−20
CSPH*4812A**	0.98	1.02	58MV(B,C)100−20
CSPH*6012A**	0.98	1.01	58MV(B,C)100−20
CAP**4824A**	0.97	1.01	58MV(B,C)120−20
CAP**6024A**	0.98	1.01	58MV(B,C)120−20
CNPH*4821A**	0.97	1.01	58MV(B,C)120−20
CNPH*6024A**	0.98	1.01	58MV(B,C)120−20
CNPH*6124A**	0.98	1.00	58MV(B,C)120−20
CNPV*4824A**	0.97	1.01	58MV(B,C)120−20
CNPV*6024A**	0.98	1.01	58MV(B,C)120−20
CNPV*6124A**	0.98	0.99	58MV(B,C)120−20
CSPH*4812A**	0.98	1.02	58MV(B,C)120−20
CSPH*6012A**	0.98	1.00	58MV(B,C)120−20
CAP**4821A**	0.98	1.02	58PH*090−16
CAP**6021A**	0.98	1.00	58PH*090−16
CNPH*4821A**	0.98	1.01	58PH*090−16
CNPH*6024A**	0.98	1.00	58PH*090−16
CNPH*6124A**	0.99	1.00	58PH*090−16
CNPV*4821A**	0.98	1.01	58PH*090−16
CSPH*4812A**	0.98	1.01	58PH*090−16
CSPH*6012A**	0.98	0.99	58PH*090−16
CAP**4821A**	0.97	1.01	58PH*110−20
CAP**6021A**	0.97	0.99	58PH*110−20
CNPH*4821A**	0.97	1.00	58PH*110−20

HEAT PUMP HEATING PERFORMANCE CONTINUED

25HBC548A30 Outdoor Section With FX4DNF049 Indoor Section**

HEATING INDOOR MODEL	CAPACITY	POWER	FURNACE MODEL
CNPH*6024A**	0.97	0.98	58PH*110–20
CNPH*6124A**	0.98	0.98	58PH*110–20
CNPV*4821A**	0.97	1.00	58PH*110–20
CSPH*4812A**	0.97	1.00	58PH*110–20
CSPH*6012A**	0.98	0.98	58PH*110–20
CAP**4824A**	0.98	1.01	58PH*135–20
CAP**6024A**	0.98	1.00	58PH*135–20
CNPH*4821A**	0.97	1.00	58PH*135–20
CNPH*6024A**	0.98	1.00	58PH*135–20
CNPH*6124A**	0.98	0.99	58PH*135–20
CNPV*4824A**	0.97	1.00	58PH*135–20
CNPV*6024A**	0.98	1.00	58PH*135–20
CNPV*6124A**	0.98	0.97	58PH*135–20
CSPH*4812A**	0.98	1.01	58PH*135–20
CSPH*6012A**	0.98	0.99	58PH*135–20
CAP**4821A**	0.98	1.04	59*N*A100V21**20
CAP**4823A**	0.98	1.04	59*N*A100V21**20
CAP**4824A**	0.98	1.04	59*N*A100V21**20
CAP**6021A**	0.99	1.04	59*N*A100V21**20
CAP**6024A**	0.99	1.04	59*N*A100V21**20
CAP**6025A**	0.99	1.04	59*N*A100V21**20
CNPH*4821A**	0.98	1.04	59*N*A100V21**20
CNPH*6024A**	0.98	1.03	59*N*A100V21**20
CNPH*6124A**	0.99	1.03	59*N*A100V21**20
CNPV*4821A**	0.98	1.04	59*N*A100V21**20
CNPV*4824A**	0.98	1.04	59*N*A100V21**20
CNPV*6024A**	0.98	1.03	59*N*A100V21**20
CNPV*6124A**	0.99	1.02	59*N*A100V21**20
CSPH*4812A**	0.99	1.04	59*N*A100V21**20
CSPH*6012A**	0.99	1.03	59*N*A100V21**20
CAP**4823A**	0.98	1.04	59*N*A120V24**22
CAP**4824A**	0.98	1.03	59*N*A120V24**22
CAP**6024A**	0.98	1.02	59*N*A120V24**22
CAP**6025A**	0.98	1.02	59*N*A120V24**22
CNPH*4821A**	0.98	1.03	59*N*A120V24**22
CNPH*6024A**	0.98	1.02	59*N*A120V24**22
CNPH*6124A**	0.98	1.01	59*N*A120V24**22
CNPV*4824A**	0.98	1.03	59*N*A120V24**22
CNPV*6024A**	0.98	1.02	59*N*A120V24**22
CNPV*6124A**	0.98	0.99	59*N*A120V24**22
CSPH*4812A**	0.98	1.03	59*N*A120V24**22
CSPH*6012A**	0.98	1.01	59*N*A120V24**22
CAP**4817A**	1.00	1.07	59*P5A080E17**16
CAP**4821A**	0.99	1.07	59*P5A080E17**16
CAP**6021A**	1.00	1.06	59*P5A080E17**16
CNPH*4821A**	0.99	1.06	59*P5A080E17**16
CNPH*6024A**	1.00	1.05	59*P5A080E17**16
CNPH*6124A**	1.00	1.04	59*P5A080E17**16
CNPV*4821A**	0.99	1.06	59*P5A080E17**16
CSPH*4812A**	1.00	1.07	59*P5A080E17**16
CSPH*6012A**	1.00	1.05	59*P5A080E17**16
CAP**4821A**	0.99	1.06	59*P5A100E21**16
CAP**4823A**	0.99	1.06	59*P5A100E21**16
CAP**4824A**	0.99	1.05	59*P5A100E21**16
CAP**6021A**	0.99	1.04	59*P5A100E21**16
CAP**6024A**	0.99	1.03	59*P5A100E21**16
CAP**6025A**	0.99	1.03	59*P5A100E21**16
CNPH*4821A**	0.99	1.05	59*P5A100E21**16
CNPH*6024A**	0.99	1.03	59*P5A100E21**16

HEATING INDOOR MODEL	CAPACITY	POWER	FURNACE MODEL
CNPH*6124A**	1.00	1.03	59*P5A100E21**16
CNPV*4821A**	0.99	1.05	59*P5A100E21**16
CNPV*4824A**	0.99	1.05	59*P5A100E21**16
CNPV*6024A**	0.99	1.03	59*P5A100E21**16
CNPV*6124A**	1.00	1.02	59*P5A100E21**16
CSPH*4812A**	0.99	1.04	59*P5A100E21**16
CSPH*6012A**	1.00	1.03	59*P5A100E21**16
CAP**4823A**	0.99	1.04	59*P5A120E24**22
CAP**4824A**	0.99	1.03	59*P5A120E24**22
CAP**6024A**	0.99	1.02	59*P5A120E24**22
CAP**6025A**	0.99	1.02	59*P5A120E24**22
CNPH*4821A**	0.99	1.03	59*P5A120E24**22
CNPH*6024A**	0.99	1.02	59*P5A120E24**22
CNPH*6124A**	1.00	1.01	59*P5A120E24**22
CNPV*4824A**	0.99	1.03	59*P5A120E24**22
CNPV*6024A**	0.99	1.02	59*P5A120E24**22
CNPV*6124A**	1.00	1.00	59*P5A120E24**22
CSPH*4812A**	0.99	1.03	59*P5A120E24**22
CSPH*6012A**	0.99	1.00	59*P5A120E24**22

See note on pg. 60

HEAT PUMP HEATING PERFORMANCE CONTINUED

INDOOR AIR		OUTDOOR COIL ENTERING AIR TEMPERATURES ° F (° C)																							
		−3 (−19.4)			7 (−13.9)			17 (−8.3)			27 (−2.8)			37 (2.8)			47 (8.3)			57 (13.9)			67 (19.4)		
EDB ° F (° C)	CFM	Capacity MBtuh		Total Syst. KW†	Capacity MBtuh		Total Syst. KW†	Capacity MBtuh		Total Syst. KW†	Capacity MBtuh		Total Syst. KW†	Capacity MBtuh		Total Syst. KW†	Capacity MBtuh		Total Syst. KW†	Capacity MBtuh		Total Syst. KW†	Capacity MBtuh		Total Syst. KW†
		Total	Integ*		Total	Integ*		Total	Integ*		Total	Integ*		Total	Integ*		Total	Integ*		Total	Integ*		Total	Integ*	
25HBC560A**30 Outdoor Section With FX4DNF061 Indoor Section																									
65 (18.3)	1750	20.70	19.04	3.28	27.02	24.83	3.42	33.72	30.75	3.56	41.23	36.62	3.72	49.82	45.33	3.93	57.86	57.86	4.12	67.41	67.41	4.34	78.26	78.26	4.58
	2000	21.11	19.43	3.32	27.50	25.28	3.45	34.30	31.27	3.58	42.09	37.39	3.72	50.38	45.85	3.90	58.60	58.60	4.07	68.57	68.57	4.25	79.11	79.11	4.49
	2250	21.49	19.77	3.37	27.92	25.66	3.49	34.77	31.71	3.60	43.47	38.61	3.77	50.91	46.33	3.90	59.23	59.23	4.06	69.29	69.29	4.21	79.67	79.67	4.43
70 (21.1)	1750	19.65	18.07	3.42	26.01	23.91	3.57	32.79	29.90	3.72	40.18	35.69	3.88	49.10	44.68	4.11	57.00	57.00	4.30	66.31	66.31	4.55	77.15	77.15	4.78
	2000	20.06	18.45	3.46	26.49	24.34	3.59	33.34	30.39	3.73	40.83	36.26	3.88	49.67	45.20	4.08	57.72	57.72	4.26	67.32	67.32	4.46	78.01	78.01	4.68
	2250	20.43	18.80	3.50	26.91	24.73	3.63	33.81	30.82	3.76	41.39	36.76	3.89	50.19	45.68	4.08	58.34	58.34	4.24	68.30	68.30	4.40	78.62	78.62	4.63
75 (23.9)	1750	18.54	17.06	3.56	24.96	22.94	3.72	31.79	28.98	3.88	39.14	34.76	4.06	48.41	44.05	4.30	56.16	56.16	4.50	65.21	65.21	4.76	76.04	76.04	4.99
	2000	18.95	17.44	3.60	25.43	23.37	3.75	32.33	29.47	3.90	39.76	35.31	4.05	49.00	44.59	4.27	56.88	56.88	4.45	66.27	66.27	4.66	76.93	76.93	4.89
	2250	19.32	17.77	3.65	25.85	23.76	3.79	32.79	29.90	3.92	40.31	35.80	4.06	49.45	45.00	4.26	57.47	57.47	4.43	67.20	67.20	4.61	77.54	77.54	4.83

HEATING INDOOR MODEL	CAPACITY	POWER	FURNACE MODEL
*FX4DN(B F)061	1.00	1.00	
FB4CNF060	0.98	1.03	
FE4ANB006	0.98	0.98	
FV4BNB006	0.98	0.98	
FV4CNB006	0.98	0.98	
FX4CN(B,F)060	0.98	0.99	
FY4ANB060	1.00	1.05	
FY5BNB060	1.02	1.07	
CAP**6021A**	0.99	1.04	
CAP**6024A**	0.99	1.04	
CAP**6025A**	0.99	1.04	
CNPH*6024A**	0.99	1.04	
CNPH*6124A**	0.99	1.03	
CNPV*6024A**	0.99	1.04	
CNPV*6124A**	0.99	1.02	
CSPH*6012A**	0.99	1.03	
CAP**6021A**	0.99	1.04	58CV(A,X)110−20
CNPH*6024A**	0.99	1.04	58CV(A,X)110−20
CNPH*6124A**	0.99	1.03	58CV(A,X)110−20
CSPH*6012A**	0.99	1.03	58CV(A,X)110−20
CAP**6024A**	0.99	1.03	58CV(A,X)135−22
CNPH*6024A**	0.99	1.03	58CV(A,X)135−22
CNPH*6124A**	0.99	1.02	58CV(A,X)135−22
CNPV*6024A**	0.99	1.03	58CV(A,X)135−22
CNPV*6124A**	0.99	1.00	58CV(A,X)135−22
CSPH*6012A**	0.99	1.02	58CV(A,X)135−22
CAP**6024A**	0.99	1.02	58CV(A,X)155−22

HEATING INDOOR MODEL	CAPACITY	POWER	FURNACE MODEL
CNPH*6024A**	0.99	1.02	58CV(A X)155−22
CNPH*6124A**	0.99	1.01	58CV(A X)155−22
CNPV*6024A**	0.99	1.02	58CV(A X)155−22
CNPV*6124A**	0.99	1.00	58CV(A X)155−22
CSPH*6012A**	0.99	1.01	58CV(A X)155−22
CAP**6025A**	1.02	1.08	58HDV100−−20
CNPH*6024A**	0.99	1.06	58ME(B,C)080−16
CSPH*6012A**	0.99	1.05	58ME(B,C)080−16
CAP**6021A**	0.99	1.04	58ME(B,C)100−20
CNPH*6024A**	0.99	1.04	58ME(B,C)100−20
CNPH*6124A**	0.99	1.03	58ME(B,C)100−20
CSPH*6012A**	0.99	1.02	58ME(B,C)100−20
CAP**6024A**	0.99	1.03	58ME(B,C)120−20
CNPH*6024A**	0.99	1.03	58ME(B,C)120−20
CNPH*6124A**	0.99	1.02	58ME(B,C)120−20
CNPV*6024A**	0.99	1.03	58ME(B,C)120−20
CNPV*6124A**	0.99	1.00	58ME(B,C)120−20
CSPH*6012A**	0.99	1.02	58ME(B,C)120−20
CNPV*6124A**	0.99	1.02	58MV(B,C)120−20
CSPH*6012A**	0.99	1.04	58MV(B,C)120−20
CAP**6021A**	0.99	1.03	58PH*110--20
CNPH*6024A**	0.99	1.03	58PH*110--20
CNPH*6124A**	0.99	1.02	58PH*110--20
CSPH*6012A**	0.99	1.01	58PH*110--20
CAP**6024A**	0.99	1.04	58PH*135--20
CNPH*6024A**	0.99	1.04	58PH*135--20

HEATING INDOOR MODEL	CAPACITY	POWER	FURNACE MODEL
CNPH*6124A**	0.99	1.03	58PH*135−20
CNPV*6024A**	0.99	1.04	58PH*135−20
CNPV*6124A**	0.99	1.01	58PH*135−20
CSPH*6012A**	0.99	1.02	58PH*135−20
CAP**6021A**	1.01	1.09	59*N*A100V21**20
CAP**6024A**	1.01	1.08	59*N*A100V21**20
CAP**6025A**	1.01	1.08	59*N*A100V21**20
CNPH*6024A**	1.00	1.08	59*N*A100V21**20
CNPH*6124A**	1.01	1.08	59*N*A100V21**20
CNPV*6024A**	1.00	1.08	59*N*A100V21**20
CNPV*6124A**	1.01	1.06	59*N*A100V21**20
CSPH*6012A**	1.01	1.07	59*N*A100V21**20
CAP**6024A**	1.00	1.05	59*N*A120V24**22
CAP**6025A**	1.00	1.05	59*N*A120V24**22
CNPH*6024A**	1.00	1.05	59*N*A120V24**22
CNPH*6124A**	1.00	1.04	59*N*A120V24**22
CNPV*6024A**	1.00	1.05	59*N*A120V24**22
CNPV*6124A**	1.00	1.03	59*N*A120V24**22
CSPH*6012A**	1.00	1.04	59*N*A120V24**22
CAP**6024A**	1.00	1.05	59*P5A120E24**22
CAP**6025A**	1.00	1.05	59*P5A120E24**22
CNPH*6024A**	1.00	1.05	59*P5A120E24**22
CNPH*6124A**	1.00	1.04	59*P5A120E24**22
CNPV*6024A**	1.00	1.05	59*P5A120E24**22
CNPV*6124A**	1.01	1.04	59*P5A120E24**22
CSPH*6012A**	1.00	1.04	59*P5A120E24**22

NOTE: When the required data falls between the published data, interpolation may be performed. Extrapolation is not an acceptable practice.

* The Btuh heating capacity values shown are net integrated values from which the defrost effect has been subtracted. The Btuh heating from supplement heaters should be added to those values to obtain total system capacity.

† The kW values include the compressor, outdoor fan motor, and indoor blower motor. The kW from supplement heaters should be added to these values to obtain total system kilowatts.

EDB — Entering Dry Bulb

GUIDE SPECIFICATIONS
GENERAL

System Description

Outdoor-mounted, air-cooled, split-system heat pump unit suitable for ground or rooftop installation. Unit consists of a hermetic compressor, an air-cooled coil, propeller-type condenser fan, and a control box. Unit will discharge supply air upward as shown on contract drawings. Unit will be used in a refrigeration circuit to match up to a packaged fan coil or coil unit.

Quality Assurance

— Unit will be rated in accordance with the latest edition of AHRI Standard 240.

— Unit will be certified for capacity and efficiency, and listed in the latest AHRI directory.

— Unit construction will comply with latest edition of ANSI/ ASHRAE and with NEC.

— Unit will be constructed in accordance with UL standards and will carry the UL label of approval. Unit will have C-UL approval.

— Unit cabinet will be capable of withstanding Federal Test Method Standard No. 141 (Method 6061) 500-hr salt spray test.

— Air-cooled condenser coils are pressure tested and the outdoor unit is leak tested.

— Unit constructed in ISO9001 approved facility.

Delivery, Storage, and Handling

— Unit will be shipped as single package only and is stored and handled per unit manufacturer's recommendations.

Warranty (for inclusion by specifying engineer)

— U.S. and Canada only.

PRODUCTS

Equipment

— Factory assembled, single piece, air-cooled heat pump unit. Contained within the unit enclosure is all factory wiring, piping, controls, compressor, refrigerant charge Puron® (R-410A), and special features required prior to field start-up.

Unit Cabinet

— Unit cabinet will be constructed of galvanized steel, bonderized, and coated with a powder coat paint.

Fans

— Condenser fan will be direct-drive propeller type, discharging air upward.

— Condenser fan motors will be totally enclosed, 1-phase type with class B insulation and permanently lubricated bearings.

— Shafts will be corrosion resistant.

— Fan blades will be statically and dynamically balanced.

— Condenser fan openings will be equipped with steel wire safety guards.

Compressor

— Compressor will be hermetically sealed.

— Compressor will be mounted on rubber vibration isolators.

Condenser Coil

— Condenser coil will be air cooled.

— Coil will be constructed of aluminum fins mechanically bonded to copper tubes which are then cleaned, dehydrated, and sealed.

Refrigeration Components

— Refrigeration circuit components will include liquid-line shutoff valve with sweat connections, vapor-line shutoff valve with sweat connections, system charge of Puron® (R-410A) refrigerant, POE compressor oil, accumulator, and reversing valve.

Operating Characteristics

— The capacity of the unit will meet or exceed _____ Btuh at a suction temperature of _____ °F/°C. The power consumption at full load will not exceed _____ kW.

— Combination of the unit and the evaporator or fan coil unit will have a total net cooling capacity of _____ Btuh or greater at conditions of _____ CFM entering air temperature at the evaporator at _____ °F wet bulb and _____ °F/°C dry bulb, and air entering the unit at _____ °F/°C.

— The system will have a SEER of _____ Btuh/watt or greater at DOE conditions.

Electrical Requirements

— Nominal unit electrical characteristics will be _____ v, single phase, 60 hz. The unit will be capable of satisfactory operation within voltage limits of _____ v to _____ v.

— Unit electrical power will be single point connection.

— Control circuit will be 24v.

Special Features

— Refer to section of this literature identifying accessories and descriptions for specific features and available enhancements.

Copyright 2011 Carrier Corp. • 7310 W. Morris St. • Indianapolis, IN 46231 Printed in U.S.A. Edition Date: 09/11 **Catalog No: 25HBC5−2PD**

Manufacturer reserves the right to change, at any time, specifications and designs without notice and without obligations. Replaces: 25HBC5−1PD