GT-PG (50YE) Packaged Series

SINGLE-STAGE
HORIZONTAL, VERTICAL, AND DOWNFLOW
PURON® SYSTEMS SIZES 018 - 070 [5.3 - 21.1 kW]

Revised Aug. 1 2010

Carrier®

turn to the experts℠

Table of Contents

What's New With The GT-PG? 121
GT-PG Design Features 122
Unit Model Key 124
About AHRI/ISO/ASHRAE 13256-1 125
AHRI/ISO/ASHRAE/ANSI 13256-1 Performance 126
Reference Calculations & Legend 127
Performance Correction Factors 128
Performance Data 130
Performance Data Selection Notes 146
Physical Data 147
Vertical Upflow Dimensions 148
Vertical Downflow Dimensions 150
Horizontal Dimensions 152
Electrical Data 154
ECM Electrical Wiring Diagram 155
PSC Electrical Wiring Diagram 156
ECM & Whole House Dehumidification Electrical Wiring Diagram 157
ECM Control Features & Operation 158
ECM Blower Performance Data 160
PSC Blower Performance Data 161
Auxiliary Heat Electrical Data 162
Engineering Guide Specifications 163
Accessories & Options 164
Warranty Information 164
Revision History 166

What's New with Carrier Geothermal's GT-PG?

Puron® Refrigerant

Puron® is a non-chlorine based (HFC-410A) refrigerant, that with R-407C and R-134A, is seen as the future of all refrigerants used worldwide. HFC-410A characteristics compared to R-22 are:

- Binary and near azeotropic mixture of 50% R-32 and 50% R-125.
- Higher efficiencies (50-60% higher operating pressures)
- Zero ozone depletion potential and low global warming potential.
- Virtually no glide. Unlike other alternative refrigerants, the two components in HFC-410A have virtually the same leak rates. Therefore, refrigerant can be added if necessary without recovering the charge.

MERV 11 2" Pleated filter

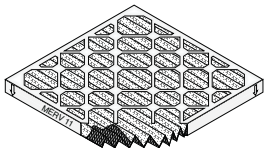

All GT-PG units include a factory installed 2" filter rack/duct collar with a 2" pleated high efficiency MERV 11 air filter. The MERV (minimum efficiency reporting value per ASHRAE Standard 52.2) design features ultra low velocity (<300 fpm) for extended filter life, low pressure drop (0.13 – 0.18 in. wg.) and high particulate efficiency (size E1=41%, E2=69% and E3=87%). The pleated design and low velocity combine to allow the filter to store a large amount of dirt and result in a practical replacement life of up to 6 months.

Tin-Coated Air Coil

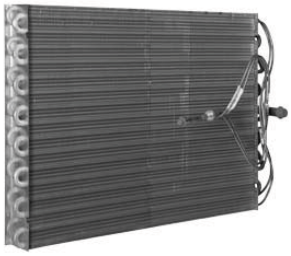

All Carrier Geothermal GT-PG Series models feature a tin-coated air-coil. This coating process will provide years of protection against corrosion from airborne chemicals resulting from modern building material out gassing and most environmental chemicals found in the air. Modern building materials such as counter-tops, floor coverings, paints and other materials can "outgas" chemicals into the home's air. Some of these chemicals are suspected of contributing to corrosion in the air coils found in both traditional and geothermal heating and cooling equipment. Corrosion often results in refrigerant leaks and eventual failure of the air coil costing hundreds of dollars to replace. Studies have also shown that these air coil coatings improve moisture shedding and therefore improve a unit's moisture removal capability resulting in a more comfortable home. The GT-PG Series is your assurance of both maximum air coil life and comfort.

Copeland Scroll Compressor

There's a reason 9 out of every 10 scroll compressors installed are Copeland. With over 15 years of painstaking R & D and rigid production controls, Copeland is able to build the most reliable, efficient and quiet scroll compressors in the world.

The concept of compressing a gas by turning one involute form – or "scroll" – against another around a common axis is nearly a century old. It wasn't until the late 1980s, however that one company – Copeland – turned theory into practical reality, using sophisticated, computer-assisted design and manufacturing methods to achieve the critical tolerances required. In the years since, Copeland has become the leader in scroll compressor applications, with nine scroll manufacturing facilities on three continents and millions of units installed worldwide.

Copeland Scroll compressors employ two identical, concentric scrolls, one inserted within the other. One scroll remains stationary as the other orbits around it. This movement draws gas into the compression chamber and moves it through successively smaller "pockets" formed by the scroll's rotation, until it reaches maximum pressure at the center of the chamber. There, it's released through a discharge port in the fixed scroll. During each orbit, several pockets are compressed simultaneously, so operation is virtually continuous.

Recently, Copeland produced its 500,000th Scroll compressor with the environmentally sound refrigerant HFC-410A. Field results have shown that HFC-410A units with Copeland Scroll compressors offer nearly 30% lower failure rates versus existing R-22 units. HFC-410A units can reach the industry's highest efficiency levels. HFC-410A scrolls also offer sound advantages to other compressor technologies, typically operating several decibels quieter than comparable R-22 models. The result is unsurpassed reliability and virtually silent operation.

Other New Features

- Powder coated cabinet, taupe metallic.
- Liftout handles for front access panels.
- Corrosion and stain resistant stainless steel drain pan with extra slope designed in.
- Factory mounted filter drier for trouble free reliability.
- Easy access low profile horizontal control box.
- Double isolated compressor for quiet and vibration free operation.
- Foil faced insulation in air handling compartment to allow easy cleaning and prevent microfiber introduction into the air stream.
- Open Service-Friendly Cabinet (i.e, all components in compressor section can be serviced from the front).

GT-PG Design Features

The GT-PG Series has abundant features and industry leading efficiency.

Application Flexibility
- Eight Capacities 018, 024, 030, 036, 042, 048, 060 and 070.
- Extended range operation (20-120°F EWT) and flow rates as low as 1.5 gpm per ton.
- Vertical packages with either true right or true left return air options.
- Internally trapped condensate drain.
- Optional variable speed ECM fan motor adapts to various duct systems.
- Internal electric heat unit (optional) designed for easy field installation.
- Circuit breaker protected loop and hot water generator pumps.
- Field selectable low temperature protection setting for well or loop.
- Standard pre-installed 2" filter frame with 2" high performance MERV 11 pleated air filter.*

Operating Efficiencies
- Puron® HFC-410A zero ozone depletion refrigerant.
- High efficiencies in AHRI/ISO/ASHRAE/ANSI 13256-1 single stage ratings for heating COPs, cooling EERs with low water flow rates.
- Multi-speed tap PSC fan or optional ECM variable speed fan for ultra high efficiencies and unsurpassed comfort.
- Wide operating temperature range and high efficiency allow shorter loops.
- Optional hot water generator with internal pump generates hot water at considerable savings.
- Rugged and highly efficient next generation Copeland scroll compressors provide the extremely high efficiencies and capacities.
- Oversized coaxial tube water-to-refrigerant heat exchangers operate at low liquid pressure drop. Convoluted copper (and optional cupro-nickel) water tube functions efficiently at low-flow rates and provides freeze-damage resistance.
- Oversized tin-coated, rifled tube/lanced aluminum fin, air to refrigerant heat exchangers provide high efficiency at low face velocity.
- Large low RPM blowers with optional variable speed fan motors provide quiet, efficient air movement with high static capability.

Service Advantages
- Removable panels - 3 for compressor, 2 for air handling compartment.
- Low profile control box grants easy access to all internal components.
- Factory installed liquid line filter/drier.
- Brass swivel-type water connections for quick connection and elimination of wrenches or sealants during installation.
- Bi-directional thermal expansion valve.
- CXM control features status light with memory for easy diagnostics.
- Unit Performance Sentinel alerts homeowner of potential performance issues.
- Circuit breaker protected 75VA control transformer.
- Optional ECM motor includes control board with thermostat signal diagnostic LEDs, airflow display LED (100 CFM per flash), and simplified CFM selection.
- Insulated divider and separate air handling/compressor compartments permit service testing without air bypass.
- Fan motors have quick attach wiring harness for fast removal.
- Internal dropout blower for easy servicing.
- High and low pressure service ports on refrigerant circuit.
- Accurate refrigerant sensing low temperature protection.

Factory Quality
- All units are built on our Integrated Process Control Assembly System (IPCS). The IPCS is a unique state of the art manufacturing system that is designed to assure quality of the highest standards of any manufacturer in the water-source industry. Our IPCS system:
  - Verifies that the correct components are being assembled.
  - Automatically performs special leak tests on all joints.
  - Conducts pressure tests.
  - Performs highly detailed run test unparalleled in the HVAC industry.
  - Automatically disables packaging for a "failed" unit.
  - Creates computer database for future service analysis and diagnostics from run test results.
- All units are water run-tested in all modes to insure efficiency and reliability.
- Heavy gauge galvanized steel cabinets are epoxy powder coated for durable and long-lasting finish.
- All refrigerant brazing is done in a nitrogen atmosphere.
- All units are deep evacuated to less than 100 microns prior to refrigerant charging.
- All joints are both helium and halogen leak tested to insure annual leak rate of less than 1/4 ounce.
- Coaxial heat exchanger, refrigerant suction lines and all water lines are fully insulated to eliminate condensation problems in low temperature applications.
- Noise Reduction features include: double isolation mounted compressors; insulated compressor compartment; interior cabinet insulation using 1/2" coated glass fiber and optional variable speed fan.
- Safety features include: high pressure and loss of charge to protect the compressor; condensate overflow protection; low temperature protection sensors to safeguard the coaxial heat exchanger and air coil; hot water high-limit and low compressor discharge temperature switch provided to shut down the hot water generator when conditions dictate. Fault lockout enables emergency heat and prevents compressor operation until thermostat or circuit breaker has been reset.

Simplified Controls
- CXM solid state control module.
- 'CFM' LED displays airflow (optional ECM motor).
- Dehumidification mode for higher latent cooling (optional ECM motor).

GT-PG Design Features

Options & Accessories

- Optional hot water generator with internally mounted pump.
- Optional cupro-nickel coaxial heat exchanger.
- Electronic thermostat.
- Closed loop Flow Controller.
- Electronic auto-changeover thermostat with 3-stage heat, 2-stage cool and indicator LEDs.
- Hose kits.
- Optional Whole House Dehumidification

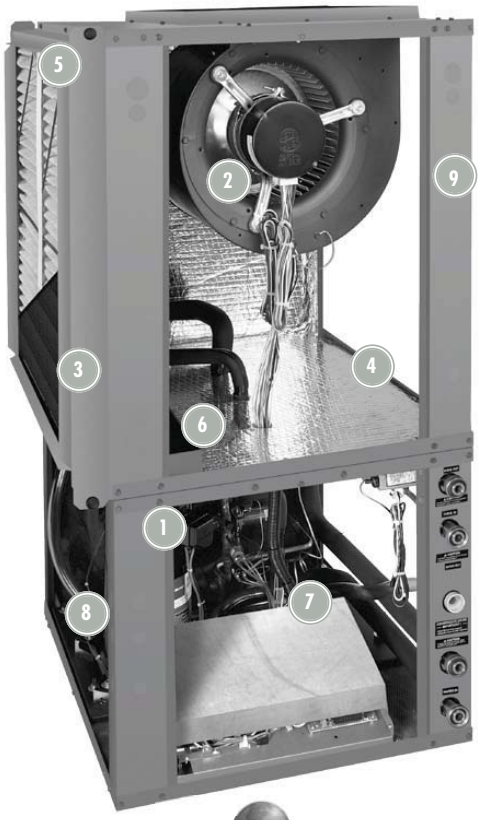

1. Copeland™ High Efficiency Scroll Compressor or High Efficiency Rotary Compressor (018)
2. Optional State-Of-The-Art Variable Speed Blower Motor
3. Tin-Coated Air Coil
4. Foil Faced Insulation In The Blower Section, Fully Insulated Compressor Section
5. Two Inch Filter Frame With High Performance MERV 11 Pleated Air Filter*
6. Stainless Steel Drain Pan For Long Life
7. Unit Performance Sentinel: Automatic Alert System Lets You Know If The System Is Not Running At Peak Performance**
8. Exclusive Dual Level Compressor Vibration Isolation For Ultra Quiet Operation
9. Five Easy, Lift-out Service Access Panels With Powder Coated Cabinet, Taupe Metallic

* MERV= Minimum Efficiency Reporting Value as specified by ASHRAE (American Society of Heating, Refrigerating and Air Conditioning Engineers) standard 52.2.

** When installed with a Carrier Geothermal Residential Thermostat.

Puron
the environmentally sound refrigerant

Features Puron®
HFC-410A Zero Ozone
Depletion Refrigerant

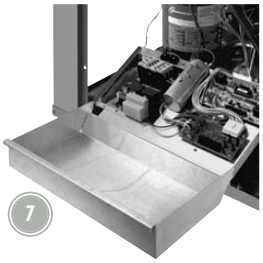

Unit Model Key

1 2 3	4 5 6	7	8	9	10	11	12
50	YEV	024	J	C	B	3	1	1

Prefix

Series
YEV = Puron Vertical Upflow Single-Stage
YEH = Puron Horizontal Single-Stage
YED = Puron Vertical Downflow Single-Stage

Unit Size
018, 024, 030, 036, 042, 048, 060, 070

Air Flow Configuration

Option	Return	Discharge	Motor	Configuration
J	LEFT	UP/DOWN	ECM	YEV/D
K	RIGHT	UP/DOWN	ECM	YEV/D
L	LEFT	UP/DOWN	PSC	YEV/D
R	RIGHT	UP/DOWN	PSC	YEV/D
N	RIGHT	LEFT	ECM	YEH
P	RIGHT	BACK	ECM	YEH
W	LEFT	RIGHT	ECM	YEH
Y	LEFT	BACK	ECM	YEH
Z	RIGHT	LEFT	PSC	YEH
B	RIGHT	BACK	PSC	YEH
S	LEFT	RIGHT	PSC	YEH
E	LEFT	BACK	PSC	YEH

Controls
C = CXM

Heat Exchanger Options

	Coated Air Coil	
	Copper	Cupro-Nickel
Without Hot Water Generator	A	J
Standard	B	K
Whole House Dehumidification	R	N/A
Whole House Dehumidification w/Hot Water Generator	L	N/A

Voltage
3 = 280-230/60/1

Revision Level
1 = 024-070
2 = 018

Packaging
1 = Single Pack, Domestic

About AHRI/ISO/ASHRAE 13256-1

About AHRI/ISO/ASHRAE 13256-1

AHRI/ASHRAE/ISO 13256-1 (Air-Conditioning and Refrigeration Institute/American Society of Heating, Refrigerating and Air Conditioning Engineers/International Standards Organization) is a certification standard for water-source heat pumps used in the following applications:

- WLHP (Water Loop Heat Pump – Boiler/Tower)
- GWHP (Ground Water Heat Pump – Open Loop)
- GLHP (Ground Loop Heat Pump – Geothermal)

The directory at http://www.ahrinet.org/ is constantly being updated and immediately available on the Internet. All ratings are submitted by the manufacturer for certification, and must be approved by AHRI. Therefore, there is a significant difference between AHRI "certified" and AHRI "rated." Thirty percent of a manufacturer's basic models must be tested each year. AHRI selects models at random from stock for testing on the basis of its evaluation of a participant's certification data.

Units that fail one or more certified test (90% of declared performance or lower) may be declared defective. If the initial failure is a performance test, the manufacturer must obsolete all units within the same basic model group or elect to have a second sample tested. If the second unit fails a performance test, it must be obsoleted, together with all units within the same basic model group. Carrier Geothermal takes certification seriously. We were recently awarded a certificate for consecutive years of no AHRI failures.

Temperatures used in AHRI certification standards are S.I. (Système International – metric) based. For example, typical catalog data for cooling is shown at 80°F DB/67°F WB [26.7°C DB/19.4°C] entering air temperature, but the AHRI standard for cooling is 80.6°F DB/66.2°F WB [27°C DB/19°C], since it is based upon whole numbers in degrees Celsius. Water and air temperatures for the standard are shown below.

Test Condition Comparison Table

	WLHP	GWHP	GLHP
Cooling			
Entering Air Temperature - DB/WB °F [°C]	80.6/66.2 [27/19]	80.6/66.2 [27/19]	80.6/66.2 [27/19]
Entering Water Temperature - °F [°C]	86 [30]	59 [15]	77 [25]
Fluid Flow Rate	*	*	*
Heating			
Entering Air Temperature - DB/WB °F [°C]	68 [20]	68 [20]	68 [20]
Entering Water Temperature - °F [°C]	68 [20]	50 [10]	32 [0]
Fluid Flow Rate	*	*	*

*Flow rate is specified by the manufacturer

Data certified by AHRI include heating/cooling capacities, EER (Energy Efficiency Ratio – Btuh per Watt) and COP (Btuh per Btuh) at the various conditions shown above. Pump power correction is calculated to adjust efficiencies for pumping Watts. Within each model, only one water flow rate is specified for all three groups, and pumping Watts are calculated using the formula below. This additional power is added onto the existing power consumption.

- Pump power correction = (gpm x 0.0631) x (Press Drop x 2990)/300

Fan power is corrected to zero external static pressure using the equation below. The nominal airflow is rated at a specific external static pressure. This effectively reduces the power consumption of the unit and increases cooling capacity but decreases heating capacity.

- Fan Power Correction = (cfm x 0.472) x (esp x 249)/300

Capacities and efficiencies are calculated using the following equations:

- ISO Cooling Capacity = Cooling Capacity (Btuh) + [Fan Power Correction (Watts) x 3.412]
- ISO EER Efficiency (Btuh/W) =
  ISO Cooling Capacity (Btuh)/[Power Input (Watts) – Fan Power Correction (Watts) + Pump Power Correction (Watts)]
- ISO Heating Capacity = Heating Capacity (Btuh) – [Fan Power Correction (Watts) x 3.412]
- ISO COP Efficiency (Btuh/Btuh) =
  ISO Heating Capacity (Btuh) x 3.412/[Power Input (Watts) - Fan Power Correction (Watts) + Pump Power Correction (Watts)]

AHRI/ISO/ASHRAE/ANSI 13256-1 Performance

ASHRAE/AHRI/ISO 13256-1. English (I-P) Units

Model	Fan Motor	Water Loop Heat Pump				Ground Water Heat Pump				Ground Loop Heat Pump			
		Cooling 86°F		Heating 68°F		Cooling 59°F		Heating 50°F		Cooling 77°F		Heating 32°F	
		Capacity Btuh	EER Btuh/W	Capacity Btuh	COP	Capacity Btuh	EER Btuh/W	Capacity Btuh	COP	Capacity Btuh	EER Btuh/W	Capacity Btuh	COP
018	PSC	18,600	15.0	23,000	5.2	21,300	24.8	18,800	4.5	19,500	18.4	14,500	3.6
	ECM	19,200	16.5	23,300	5.9	22,100	26.3	18,900	4.9	20,200	19.4	14,500	3.9
024	PSC	25,100	16.2	29,600	4.9	28,600	25.7	25,000	4.3	26,300	19.1	19,000	3.7
	ECM	25,000	17.0	30,000	5.3	28,100	27.4	25,100	4.6	26,000	20.0	19,400	3.8
030	PSC	28,200	15.3	34,900	5.0	31,700	22.9	29,400	4.4	29,400	17.6	23,600	3.8
	ECM	28,600	15.6	35,200	5.3	32,200	23.9	29,400	4.6	29,800	18.0	23,700	3.9
036	PSC	33,000	16.6	39,800	5.5	37,300	25.1	32,900	4.8	34,500	19.2	25,700	3.9
	ECM	33,100	17.6	39,500	5.8	37,300	26.5	32,900	5.1	34,600	20.2	25,800	4.2
042	PSC	37,400	16.0	49,400	5.4	42,900	24.3	40,100	4.6	39,300	19.4	31,600	3.8
	ECM	37,800	17.1	48,600	5.7	44,200	27.1	39,300	4.9	40,000	20.0	30,400	4.0
048	PSC	47,000	15.3	60,000	5.0	53,900	23.3	49,000	4.4	49,900	17.6	39,000	3.7
	ECM	47,600	15.9	59,700	5.2	54,100	24.6	48,700	4.5	50,100	18.5	38,400	3.8
060	PSC	61,000	15.9	70,400	5.0	67,000	23.2	58,700	4.5	63,300	18.2	46,500	3.7
	ECM	61,000	16.4	70,800	5.2	67,200	24.3	59,100	4.6	64,000	19.0	46,700	3.8
070	PSC	67,500	14.4	85,800	5.0	77,100	21.6	69,400	4.3	70,800	16.6	54,000	3.6
	ECM	67,000	15.2	84,900	5.0	77,000	23.5	69,000	4.4	70,000	17.8	53,900	3.6

Cooling capacities based upon 80.6°F DB, 66.2°F WB entering air temperature
Heating capacities based upon 68°F DB, 59°F WB entering air temperature
All ratings based upon operation at lower voltage of dual voltage rated models

ASHRAE/AHRI/ISO 13256-1. Metric (S-I) Units

Model	Fan Motor	Water Loop Heat Pump				Ground Water Heat Pump				Ground Loop Heat Pump			
		Cooling 30°C		Heating 20°C		Cooling 15°C		Heating 10°C		Cooling 25°C		Heating 0°C	
		Capacity Watts	EER W/W	Capacity Watts	COP	Capacity Watts	EER Watts	Capacity Watts	COP	Capacity Watts	EER W/W	Capacity Watts	COP
018	PSC	5,470	4.4	6,764	5.2	6,264	7.3	5,529	4.5	5,735	5.4	4264	3.6
	ECM	5,647	4.8	6,852	5.9	6,500	7.7	5,558	4.9	5,941	5.7	4,426	3.9
024	PSC	7,356	4.7	8,675	4.9	8,382	7.5	7,327	4.3	7,708	5.6	5,569	3.7
	ECM	7,327	5.0	8,792	5.3	8,236	8.0	7,356	4.6	7,620	5.9	5,686	3.8
036	PSC	8,265	4.5	10,229	5.0	9,291	6.7	8,617	4.4	8,617	5.2	6,917	3.8
	ECM	8,382	4.6	10,317	5.3	9,437	7.0	8,617	4.6	8,734	5.3	6,946	3.9
030	PSC	9,672	4.9	11,665	5.5	10,932	7.4	9,642	4.8	10,111	5.6	7,532	3.9
	ECM	9,701	5.2	11,577	5.8	10,932	7.8	9,642	5.1	10,141	5.9	7,562	4.2
042	PSC	10,961	4.7	14,478	5.4	12,573	7.1	11,753	4.6	11,518	5.4	9,261	3.8
	ECM	11,079	5.0	14,244	5.7	12,954	7.9	11,518	4.9	11,723	5.9	8,910	4.0
048	PSC	13,775	4.5	17,585	5.0	15,797	6.8	14,361	4.4	14,625	5.2	11,430	3.7
	ECM	13,951	4.7	17,497	5.2	15,856	7.2	14,273	4.5	14,683	5.4	11,254	3.8
060	PSC	17,878	4.7	20,633	5.0	19,637	6.8	17,204	4.5	18,552	5.3	13,628	3.7
	ECM	17,878	4.8	20,750	5.2	19,695	7.1	17,321	4.6	18,757	5.6	13,687	3.8
070	PSC	19,783	4.2	25,147	5.0	22,597	6.3	20,340	4.3	20,750	4.9	15,826	3.6
	ECM	19,637	4.5	24,883	5.0	22,567	6.9	20,223	4.4	20,516	5.2	15,797	3.6

Cooling capacities based upon 27°C DB, 19°C WB entering air temperature
Heating capacities based upon 20°C DB, 15°C WB entering air temperature
All ratings based upon operation at lower voltage of dual voltage rated models

Reference Calculations & Legend

Heating	Cooling	
$LWT = EWT - \frac{HE}{GPM \times 500}$	$LWT = EWT + \frac{HR}{GPM \times 500}$	$LC = TC - SC$
$LAT = EAT + \frac{HC}{CFM \times 1.08}$	$LAT\ (DB) = EAT\ (DB) - \frac{SC}{CFM \times 1.08}$	$S/T = \frac{SC}{TC}$

Hot Water Generator capacities (HWC) are based on potable water flow rate of 0.4 gpm per nominal equipment ton and 90°F entering potable water temperature.

CFM	=	airflow, cubic feet/minute	HE	=	total heat of extraction, Mbtuh
EWT	=	entering water temperature, °F	HWC	=	Hot Water Generator (desuperheater) capacity, Mbtuh
GPM	=	water flow in US gallons/minute	WPD	=	Water coil pressure drop (psi & ft hd)
EAT	=	entering air temperature, Fahrenheit (dry bulb/wet bulb)	EER	=	Energy Efficiency Ratio = BTU output/Watt input
HC	=	air heating capacity, Mbtuh	COP	=	Coefficient of Performance = BTU output/BTU input
TC	=	total cooling capacity, Mbtuh	LWT	=	leaving water temperature, °F
SC	=	sensible cooling capacity, Mbtuh	LAT	=	leaving air temperature, °F
KW	=	total power unit input, KiloWatts	LC	=	latent cooling capacity, Mbtuh
HR	=	total heat of rejection, Mbtuh	S/T	=	sensible to total cooling ratio

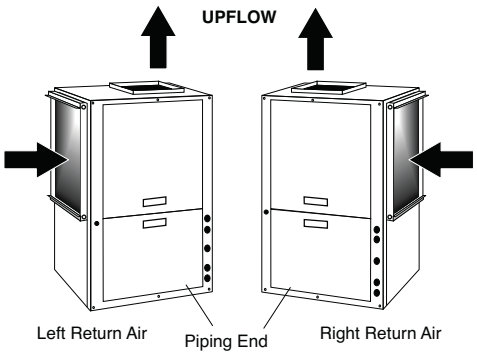

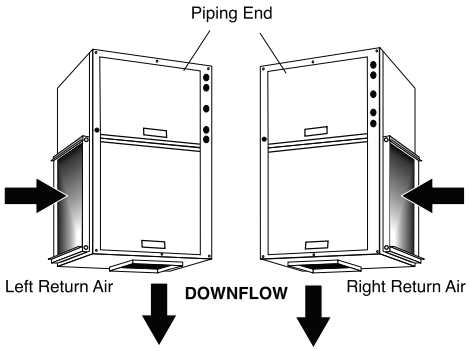

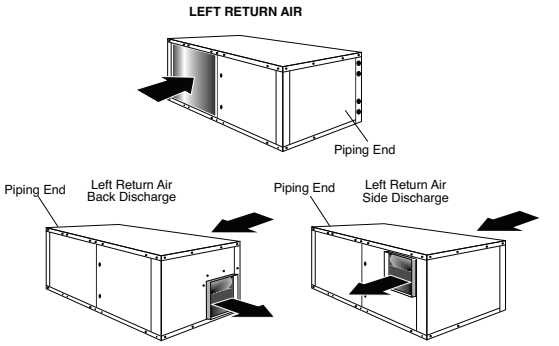

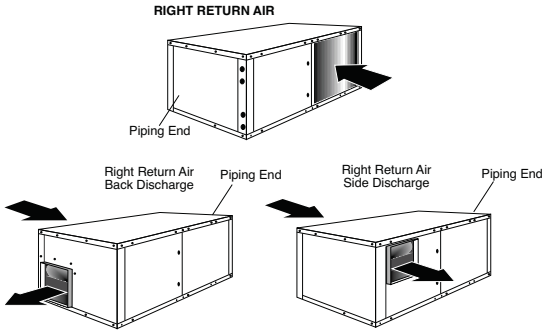

Air Flow Correction Factors

PSC Fan Motor

Airflow	Cooling					Heating		
% of Rated	Total Capacity	Sensible Capacity	S/T	Power	Heat of Rejection	Heating Capacity	Power	Heat of Extraction
68.75%	0.9465	0.8019	0.8472	0.9614	0.9496			
75%	0.9602	0.8350	0.8696	0.9675	0.9617	0.9740	1.0936	0.9425
81.25%	0.9724	0.8733	0.8981	0.9744	0.9728	0.9810	1.0635	0.9592
87.50%	0.9831	0.9149	0.9306	0.9821	0.9829	0.9876	1.0379	0.9744
93.75%	0.9923	0.9578	0.9653	0.9906	0.9920	0.9940	1.0167	0.9880
100%	1.0000	1.0000	1.0000	1.0000	1.0000	1.0000	1.0000	1.0000
106.25%	1.0062	1.0392	1.0328	1.0102	1.0070	1.0057	0.9878	1.0105
112.50%	1.0109	1.0733	1.0617	1.0211	1.0130	1.0112	0.9800	1.0194
118.75%	1.0141	1.1001	1.0848	1.0329	1.0180	1.0163	0.9705	1.0284
125%	1.0159	1.1174	1.0999	1.0455	1.0220	1.0211	0.9614	1.0368
130%	1.0161	1.1229	1.1050	1.0562	1.0244	1.0247	0.9554	1.0430

Black area denotes where operation is not recommended.

ECM Fan Motor

Airflow	Cooling					Heating		
% of Rated	Total Capacity	Sensible Capacity	S/T	Power	Heat of Rejection	Heating Capacity	Power	Heat of Extraction
68.75%	0.9470	0.8265	0.8727	0.9363	0.9449			
75%	0.9619	0.8593	0.8933	0.9455	0.9587	0.9700	1.0822	0.9410
81.25%	0.9747	0.8943	0.9175	0.9564	0.9711	0.9775	1.0536	0.9579
87.50%	0.9853	0.9302	0.9441	0.9691	0.9821	0.9851	1.0304	0.9733
93.75%	0.9938	0.9659	0.9719	0.9837	0.9918	0.9925	1.0125	0.9874
100%	1.0000	1.0000	1.0000	1.0000	1.0000	1.0000	1.0000	1.0000
106.25%	1.0041	1.0313	1.0271	1.0181	1.0069	1.0074	0.9928	1.0112
112.50%	1.0060	1.0584	1.0522	1.0381	1.0123	1.0148	0.9909	1.0210
118.75%	1.0070	1.0815	1.0740	1.0598	1.0174	1.0222	0.9622	1.0377
125%	1.0076	1.0998	1.0916	1.0834	1.0225	1.0295	0.8681	1.0712
130%	1.0083	1.1110	1.1018	1.1035	1.0271	1.0354	0.8456	1.0844

Black area denotes where operation is not recommended.

Entering Air Correction Factors

Heating			
Entering Air DB°F	Heating Capacity	Power	Heat of Extraction
45	1.0514	0.7749	1.1240
50	1.0426	0.8113	1.1032
55	1.0329	0.8525	1.0802
60	1.0224	0.8980	1.0551
65	1.0114	0.9473	1.0282
68	1.0046	0.9786	1.0115
70	1.0000	1.0000	1.0000
75	0.9883	1.0556	0.9706
80	0.9764	1.1135	0.9404

Cooling												
Entering Air WB°F	Total Capacity	Sensible Cooling Capacity Multiplier - Entering DB °F									Power	Heat of Rejection
		60	65	70	75	80	80.6	85	90	95		
50	0.7432	0.9111	*	*	*	*	*	*	*	*	0.9866	0.7901
55	0.8202	0.7709	0.8820	1.0192	*	*	*	*	*	*	0.9887	0.8527
60	0.8960		0.6702	0.8540	1.0473	*	*	*	*	*	0.9924	0.9146
65	0.9705			0.6491	0.8657	1.0809	1.1066	*	*	*	0.9975	0.9757
66.2	0.9882			0.5939	0.8152	1.0333	1.0592	1.2481	*	*	0.9990	0.9903
67	1.0000			0.5559	0.7801	1.0000	1.0261	1.2158	*	*	1.0000	1.0000
70	1.0438				0.6377	0.8645	0.8913	1.0847	1.2983	*	1.0042	1.0362
75	1.1159					0.6008	0.6289	0.8323	1.0578	1.2773	1.0123	1.0959

* = Sensible capacity equals total capacity
AHRI/ISO/ASHRAE 13256-1 uses entering air conditions of Cooling - 80.6°F DB/66.2°F WB, 1 and Heating - 68°F DB/59°F WB entering air temperature

Performance Data — GT-PG Model 018 - PSC Blower

600 CFM Nominal (Rated) Airflow Cooling, 600 CFM Nominal (Rated) Airflow Heating

Performance capacities shown in thousands of Btuh

EWT °F	GPM	WPD		Cooling - EAT 80/67°F							Heating - EAT 70°F						
		PSI	FT	Airflow CFM	TC	SC	kW	HR	EER	HW	Airflow CFM	HC	kW	HE	LAT	COP	HW
20	5.5	3.9	9.0	Operation not recommended							450	12.2	1.36	7.8	95.0	2.6	1.4
	5.5	3.9	9.0								600	12.5	1.24	8.3	89.3	2.9	1.4
30	2.8	0.7	1.6	450	20.7	16.8	0.78	23.3	26.6	0.5	450	13.7	1.40	9.2	98.1	2.9	1.7
	2.8	0.7	1.6	600	21.5	14.0	0.80	24.3	26.8	0.6	600	14.0	1.28	9.7	91.7	3.2	1.7
	4.1	2.1	4.9	450	21.0	16.8	0.74	23.5	28.4	0.5	450	14.2	1.41	9.6	99.3	2.9	1.7
	4.1	2.1	4.9	600	21.8	14.1	0.76	24.4	28.6	0.5	600	14.6	1.29	10.2	92.5	3.3	1.8
	5.5	3.5	8.1	450	21.2	16.8	0.72	23.6	29.3	0.5	450	14.5	1.42	9.9	99.9	3.0	1.8
	5.5	3.5	8.1	600	22.0	14.1	0.75	24.6	29.6	0.5	600	14.9	1.30	10.5	93.0	3.4	1.8
40	2.8	0.6	1.4	450	20.8	17.2	0.85	23.7	24.5	0.9	450	15.8	1.44	11.1	102.6	3.2	1.9
	2.8	0.6	1.4	600	21.7	14.4	0.88	24.6	24.7	0.9	600	16.3	1.32	11.8	95.1	3.6	2.0
	4.1	2	4.6	450	21.0	17.2	0.81	23.7	26.0	0.8	450	16.5	1.45	11.7	103.9	3.3	2.0
	4.1	2	4.6	600	21.8	14.4	0.83	24.7	26.2	0.9	600	16.9	1.33	12.4	96.1	3.7	2.0
	5.5	3.2	7.4	450	21.2	17.3	0.79	23.9	26.9	0.8	450	16.8	1.46	12.0	104.7	3.4	2.1
	5.5	3.2	7.4	600	22.1	14.5	0.81	24.8	27.1	0.8	600	17.3	1.33	12.8	96.7	3.8	2.1
50	2.8	0.5	1.2	450	20.6	17.3	0.95	23.9	21.8	1.4	450	18.0	1.47	13.1	107.0	3.6	2.2
	2.8	0.5	1.2	600	21.5	14.5	0.98	24.8	22.0	1.5	600	18.5	1.35	13.9	98.5	4.0	2.2
	4.1	1.7	3.9	450	21.0	17.5	0.89	24.0	23.5	1.3	450	18.7	1.48	13.8	108.6	3.7	2.3
	4.1	1.7	3.9	600	21.8	14.6	0.92	25.0	23.7	1.3	600	19.2	1.35	14.6	99.7	4.2	2.3
	5.5	2.8	6.5	450	21.1	17.5	0.86	24.0	24.4	1.2	450	19.2	1.49	14.2	109.4	3.8	2.3
	5.5	2.8	6.5	600	21.9	14.6	0.89	25.0	24.6	1.2	600	19.7	1.36	15.1	100.4	4.2	2.4
60	2.8	0.3	0.7	450	19.9	16.8	1.05	23.5	18.9	1.9	450	20.1	1.50	15.1	111.4	3.9	2.4
	2.8	0.3	0.7	600	20.7	14.1	1.09	24.4	19.1	2.0	600	20.7	1.37	16.0	101.9	4.4	2.5
	4.1	1.5	3.5	450	20.4	17.2	0.99	23.7	20.6	1.7	450	21.0	1.51	15.9	113.3	4.1	2.5
	4.1	1.5	3.5	600	21.2	14.3	1.02	24.7	20.8	1.8	600	21.6	1.38	16.9	103.3	4.6	2.6
	5.5	2.6	6.0	450	20.6	17.3	0.96	23.8	21.5	1.6	450	21.5	1.52	16.4	114.3	4.1	2.6
	5.5	2.6	6.0	600	21.4	14.4	0.99	24.8	21.7	1.6	600	22.1	1.39	17.4	104.1	4.7	2.7
70	2.8	0.3	0.7	450	18.9	16.2	1.17	22.9	16.1	2.6	450	22.3	1.54	17.1	115.9	4.3	2.7
	2.8	0.3	0.7	600	19.7	13.5	1.21	23.8	16.2	2.7	600	22.9	1.40	18.1	105.4	4.8	2.8
	4.1	1.4	3.2	450	19.5	16.6	1.10	23.2	17.7	2.3	450	23.4	1.56	18.0	118.1	4.4	2.8
	4.1	1.4	3.2	600	20.3	13.8	1.14	24.2	17.9	2.4	600	24.0	1.43	19.1	107.0	4.9	2.9
	5.5	2.4	5.5	450	19.8	16.8	1.07	23.4	18.6	2.1	450	23.9	1.57	18.5	119.3	4.5	2.9
	5.5	2.4	5.5	600	20.6	14.0	1.10	24.3	18.7	2.1	600	24.6	1.44	19.7	107.9	5.0	3.0
80	2.8	0.2	0.5	450	17.7	15.4	1.31	22.2	13.6	3.1	450	24.6	1.59	19.1	120.6	4.5	3.0
	2.8	0.2	0.5	600	18.5	12.9	1.35	23.1	13.7	3.2	600	25.2	1.46	20.3	108.9	5.1	3.0
	4.1	1.2	2.8	450	18.4	15.9	1.23	22.6	15.0	2.9	450	25.8	1.63	20.2	123.1	4.6	3.1
	4.1	1.2	2.8	600	19.2	13.2	1.27	23.5	15.1	3.0	600	26.5	1.49	21.4	110.9	5.2	3.2
	5.5	2.2	5.1	450	18.7	16.1	1.19	22.8	15.7	2.6	450	26.5	1.66	20.7	124.5	4.7	3.2
	5.5	2.2	5.1	600	19.5	13.4	1.23	23.7	15.9	2.7	600	27.2	1.52	22.0	111.9	5.3	3.3
85	2.8	0.2	0.5	450	17.1	15.0	1.39	21.9	12.4	3.4	450	25.8	1.63	20.1	123.0	4.6	3.1
	2.8	0.2	0.5	600	17.8	12.6	1.43	22.7	12.5	3.6	600	26.4	1.49	21.3	110.8	5.2	3.2
	4.1	1.15	2.7	450	17.8	15.5	1.30	22.2	13.7	3.2	450	27.1	1.69	21.2	125.7	4.7	3.2
	4.1	1.15	2.7	600	18.5	12.9	1.35	23.1	13.8	3.3	600	27.8	1.54	22.5	112.9	5.3	3.3
	5.5	2.1	4.9	450	18.1	15.7	1.26	22.4	14.4	2.9	450	27.8	1.72	21.8	127.2	4.7	3.3
	5.5	2.1	4.9	600	18.9	13.1	1.30	23.3	14.6	3.1	600	28.6	1.58	23.2	114.1	5.3	3.4
90	2.8	0.2	0.5	450	16.5	14.7	1.46	21.5	11.3	3.9	450	26.9	1.68	21.1	125.4	4.7	3.2
	2.8	0.2	0.5	600	17.2	12.3	1.51	22.4	11.4	4.1	600	27.7	1.53	22.4	112.7	5.3	3.3
	4.1	1.1	2.5	450	17.2	15.1	1.38	21.9	12.5	3.6	450	28.4	1.74	22.3	128.3	4.8	3.3
	4.1	1.1	2.5	600	17.9	12.6	1.42	22.8	12.6	3.8	600	29.1	1.60	23.6	114.9	5.3	3.4
	5.5	2	4.6	450	17.5	15.3	1.33	22.1	13.1	3.3	450	29.1	1.79	22.9	130.0	4.8	3.5
	5.5	2	4.6	600	18.3	12.8	1.38	23.0	13.2	3.5	600	29.9	1.63	24.3	116.2	5.4	3.6
100	2.8	0.2	0.5	450	15.2	14.0	1.64	20.8	9.3	4.3	Operation not recommended						
	2.8	0.2	0.5	600	15.9	11.7	1.69	21.7	9.4	4.5							
	4.1	1.1	2.5	450	15.9	14.3	1.54	21.2	10.3	4.1							
	4.1	1.1	2.5	600	16.6	12.0	1.59	22.0	10.4	4.3							
	5.5	1.9	4.4	450	16.3	14.5	1.50	21.4	10.9	4.0							
	5.5	1.9	4.4	600	16.9	12.1	1.55	22.2	10.9	4.2							
110	2.8	0.1	0.2	450	14.0	13.4	1.84	20.3	7.6	5.1							
	2.8	0.1	0.2	600	14.6	11.2	1.90	21.1	7.7	5.3							
	4.1	0.9	2.1	450	14.6	13.7	1.73	20.5	8.4	5.0							
	4.1	0.9	2.1	600	15.2	11.4	1.79	21.4	8.5	5.2							
	5.5	1.7	3.9	450	15.0	13.8	1.68	20.7	8.9	4.8							
	5.5	1.7	3.9	600	15.6	11.6	1.74	21.5	9.0	5.0							
120	2.8	0.1	0.2	450	12.9	13.1	2.06	19.9	6.2	6.1							
	2.8	0.1	0.2	600	13.4	10.9	2.13	20.7	6.3	6.3							
	4.1	0.8	1.8	450	13.4	13.2	1.94	20.1	6.9	5.9							
	4.1	0.8	1.8	600	14.0	11.0	2.01	20.8	7.0	6.1							
	5.5	1.6	3.7	450	13.7	13.3	1.89	20.2	7.3	5.6							
	5.5	1.6	3.7	600	14.3	11.1	1.95	21.0	7.3	5.9							

Interpolation is permissible; extrapolation is not.
All entering air conditions are 80°F DB and 67°F WB in cooling, and 70°F DB in heating.
AHRI/ISO certified conditions are 80.6°F DB and 66.2°F WB in cooling and 68°F DB in heating.
Table does not reflect fan or pump power corrections for AHRI/ISO conditions.
All performance is based upon the lower voltage of dual voltage rated units.
Operation below 40°F EWT is based upon a 15% methanol antifreeze solution.
Operation below 60°F EWT requires optional insulated water/refrigerant circuit.
See performance correction tables for operating conditions other than those listed above.
For operation in the shaded areas, please see the Performance Data Selection Notes.

Performance Data — GT-PG Model 018 - ECM Blower

700 CFM Nominal (Rated) Airflow Cooling, 700 CFM Nominal (Rated) Airflow Heating

Performance capacities shown in thousands of Btuh

EWT °F	GPM	WPD		Cooling - EAT 80/67°F							Heating - EAT 70°F						
		PSI	FT	Airflow CFM	TC	SC	kW	HR	EER	HW	Airflow CFM	HC	kW	HE	LAT	COP	HW
20	5.5	3.9	9.0	Operation not recommended							550	11.9	1.25	7.9	90.0	2.8	1.4
	5.5	3.9	9.0								750	12.3	1.16	8.4	85.1	3.1	1.5
30	2.8	0.7	1.6	550	20.3	12.4	0.75	22.8	27.3	0.6	550	13.2	1.29	9.0	92.3	3.0	1.7
	2.8	0.7	1.6	750	21.1	14.5	0.79	23.8	26.8	0.6	750	13.6	1.20	9.6	86.8	3.3	1.7
	4.1	2.1	4.9	550	20.7	12.6	0.71	23.1	29.1	0.5	550	13.7	1.31	9.5	93.1	3.1	1.8
	4.1	2.1	4.9	750	21.5	14.7	0.75	24.1	28.6	0.6	750	14.1	1.21	10.1	87.5	3.4	1.8
	5.5	3.5	8.1	550	21.3	12.9	0.70	23.6	30.5	0.5	550	14.0	1.31	9.7	93.6	3.1	1.8
	5.5	3.5	8.1	750	22.1	15.0	0.74	24.6	30.0	0.5	750	14.4	1.21	10.3	87.8	3.5	1.9
40	2.8	0.6	1.4	550	20.8	12.9	0.81	23.5	25.5	0.9	550	15.3	1.33	10.9	95.8	3.4	1.9
	2.8	0.6	1.4	750	21.6	15.0	0.86	24.5	25.1	1.0	750	15.8	1.23	11.6	89.5	3.8	2.0
	4.1	2.0	4.6	550	21.3	13.1	0.77	23.9	27.6	0.9	550	16.0	1.34	11.5	96.9	3.5	2.0
	4.1	2.0	4.6	750	22.1	15.2	0.81	24.9	27.2	0.9	750	16.5	1.24	12.3	90.3	3.9	2.1
	5.5	3.2	7.4	550	21.5	13.2	0.75	24.0	28.6	0.8	550	16.3	1.34	11.9	97.5	3.6	2.1
	5.5	3.2	7.4	750	22.4	15.3	0.79	25.1	28.1	0.8	750	16.8	1.24	12.6	90.8	4.0	2.1
50	2.8	0.5	1.2	550	21.3	13.5	0.90	24.3	23.7	1.5	550	17.5	1.35	13.0	99.5	3.8	2.2
	2.8	0.5	1.2	750	22.1	15.7	0.95	25.3	23.3	1.5	750	18.1	1.25	13.8	92.3	4.2	2.3
	4.1	1.7	3.9	550	21.5	13.5	0.84	24.3	25.5	1.3	550	18.4	1.36	13.8	100.9	4.0	2.3
	4.1	1.7	3.9	750	22.3	15.7	0.89	25.4	25.1	1.4	750	18.9	1.26	14.6	93.4	4.4	2.4
	5.5	2.8	6.5	550	21.6	13.5	0.82	24.4	26.4	1.2	550	18.8	1.36	14.2	101.7	4.0	2.4
	5.5	2.8	6.5	750	22.5	15.7	0.87	25.4	26.0	1.3	750	19.4	1.26	15.1	93.9	4.5	2.4
60	2.8	0.3	0.7	550	20.6	13.6	0.99	24.0	20.8	2.0	550	19.8	1.37	15.2	103.4	4.2	2.5
	2.8	0.3	0.7	750	21.5	15.8	1.05	25.0	20.4	2.1	750	20.4	1.27	16.1	95.2	4.7	2.6
	4.1	1.5	3.5	550	21.1	13.6	0.93	24.3	22.7	1.8	550	20.8	1.38	16.1	105.0	4.4	2.6
	4.1	1.5	3.5	750	22.0	15.9	0.99	25.3	22.3	1.9	750	21.4	1.28	17.1	96.5	4.9	2.6
	5.5	2.6	6.0	550	21.3	13.6	0.90	24.4	23.6	1.6	550	21.3	1.39	16.6	105.9	4.5	2.7
	5.5	2.6	6.0	750	22.2	15.9	0.96	25.4	23.2	1.7	750	22.0	1.28	17.6	97.1	5.0	2.7
70	2.8	0.3	0.7	550	19.6	13.4	1.11	23.4	17.7	2.7	550	22.1	1.40	17.3	107.2	4.6	2.8
	2.8	0.3	0.7	750	20.4	15.6	1.17	24.4	17.4	2.8	750	22.8	1.29	18.4	98.2	5.2	2.8
	4.1	1.4	3.2	550	20.3	13.5	1.04	23.8	19.5	2.4	550	23.2	1.42	18.3	109.0	4.8	2.9
	4.1	1.4	3.2	750	21.1	15.7	1.10	24.8	19.2	2.5	750	23.9	1.31	19.4	99.5	5.3	2.9
	5.5	2.4	5.5	550	20.6	13.6	1.00	24.0	20.5	2.1	550	23.8	1.43	18.8	110.0	4.9	3.0
	5.5	2.4	5.5	750	21.4	15.8	1.06	25.0	20.1	2.2	750	24.5	1.32	20.0	100.2	5.4	3.1
80	2.8	0.2	0.5	550	18.4	13.1	1.24	22.7	14.8	3.2	550	24.3	1.45	19.3	111.0	4.9	3.0
	2.8	0.2	0.5	750	19.2	15.2	1.31	23.6	14.6	3.3	750	25.1	1.34	20.5	101.0	5.5	3.1
	4.1	1.2	2.8	550	19.1	13.3	1.16	23.1	16.5	3.0	550	25.5	1.49	20.3	112.9	5.0	3.1
	4.1	1.2	2.8	750	19.9	15.4	1.23	24.1	16.2	3.1	750	26.3	1.38	21.5	102.4	5.6	3.2
	5.5	2.2	5.1	550	19.5	13.4	1.12	23.3	17.3	2.7	550	26.0	1.52	20.7	113.8	5.0	3.2
	5.5	2.2	5.1	750	20.3	15.5	1.19	24.3	17.0	2.9	750	26.8	1.40	22.0	103.1	5.6	3.3
85	2.8	0.2	0.5	550	17.8	12.9	1.32	22.3	13.5	3.6	550	25.4	1.49	20.2	112.7	5.0	3.1
	2.8	0.2	0.5	750	18.5	15.0	1.40	23.3	13.3	3.7	750	26.2	1.38	21.4	102.3	5.6	3.2
	4.1	1.15	2.7	550	18.5	13.1	1.24	22.7	15.1	3.3	550	26.5	1.55	21.1	114.6	5.0	3.3
	4.1	1.15	2.7	750	19.2	15.2	1.31	23.7	14.8	3.5	750	27.3	1.43	22.4	103.7	5.6	3.3
	5.5	2.1	4.9	550	18.9	13.2	1.20	22.9	15.9	3.1	550	27.0	1.59	21.5	115.5	5.0	3.4
	5.5	2.1	4.9	750	19.6	15.3	1.26	23.9	15.6	3.2	750	27.9	1.47	22.8	104.4	5.6	3.5
90	2.8	0.2	0.5	550	17.2	12.7	1.40	21.9	12.3	4.1	550	26.4	1.54	21.0	114.5	5.0	3.3
	2.8	0.2	0.5	750	17.8	14.8	1.48	22.9	12.1	4.3	750	27.2	1.42	22.4	103.6	5.6	3.4
	4.1	1.1	2.5	550	17.9	12.9	1.31	22.3	13.7	3.8	550	27.5	1.61	21.9	116.3	5.0	3.4
	4.1	1.1	2.5	750	18.6	15.0	1.38	23.3	13.4	3.9	750	28.4	1.49	23.2	105.0	5.6	3.5
	5.5	2.0	4.6	550	18.2	13.0	1.27	22.6	14.4	3.5	550	28.0	1.66	22.3	117.2	5.0	3.5
	5.5	2.0	4.6	750	19.0	15.2	1.34	23.5	14.2	3.6	750	28.9	1.53	23.6	105.7	5.5	3.6
100	2.8	0.2	0.5	550	15.9	12.3	1.58	21.3	10.1	4.5	Operation not recommended						
	2.8	0.2	0.5	750	16.5	14.3	1.67	22.2	9.9	4.7							
	4.1	1.1	2.5	550	16.6	12.5	1.48	21.6	11.2	4.3							
	4.1	1.1	2.5	750	17.2	14.6	1.56	22.6	11.0	4.5							
	5.5	1.9	4.4	550	16.9	12.6	1.43	21.8	11.8	4.2							
	5.5	1.9	4.4	750	17.6	14.7	1.51	22.8	11.6	4.3							
110	2.8	0.1	0.2	550	14.7	12.0	1.79	20.9	8.3	5.4							
	2.8	0.1	0.2	750	15.3	13.9	1.89	21.8	8.1	5.6							
	4.1	0.9	2.1	550	15.3	12.1	1.67	21.1	9.2	5.2							
	4.1	0.9	2.1	750	15.9	14.1	1.77	22.0	9.0	5.4							
	5.5	1.7	3.9	550	15.6	12.2	1.62	21.2	9.7	5.0							
	5.5	1.7	3.9	750	16.3	14.2	1.71	22.1	9.5	5.2							
120	2.8	0.1	0.2	550	13.8	11.5	2.03	20.8	6.8	6.3							
	2.8	0.1	0.2	750	14.4	13.4	2.14	21.7	6.7	6.6							
	4.1	0.8	1.8	550	14.3	11.8	1.90	20.8	7.5	6.1							
	4.1	0.8	1.8	750	14.8	13.7	2.01	21.7	7.4	6.3							
	5.5	1.6	3.7	550	14.5	11.9	1.83	20.8	7.9	5.9							
	5.5	1.6	3.7	750	15.1	13.9	1.94	21.7	7.8	6.1							

Interpolation is permissible; extrapolation is not.
All entering air conditions are 80°F DB and 67°F WB in cooling, and 70°F DB in heating.
AHRI/ISO certified conditions are 80.6°F DB and 66.2°F WB in cooling and 68°F DB in heating.
Table does not reflect fan or pump power corrections for AHRI/ISO conditions.
All performance is based upon the lower voltage of dual voltage rated units.
Operation below 40°F EWT is based upon a 15% methanol antifreeze solution.
Operation below 60°F EWT requires optional insulated water/refrigerant circuit.
See performance correction tables for operating conditions other than those listed above.
For operation in the shaded areas, please see the Performance Data Selection Notes.

Performance Data — GT-PG Model 024 - PSC Blower

850 CFM Nominal (Rated) Airflow Cooling, 850 CFM Nominal (Rated) Airflow Heating

Performance capacities shown in thousands of Btuh

EWT °F	GPM	WPD		Cooling - EAT 80/67°F							Heating - EAT 70°F						
		PSI	FT	Airflow CFM	TC	SC	kW	HR	EER	HW	Airflow CFM	HC	kW	HE	LAT	COP	HW
20	8.0	5.6	12.9	Operation not recommended							640	16.3	1.80	10.6	94	2.66	1.6
	8.0	5.6	12.9								850	16.8	1.65	11.2	88	2.99	1.7
30	4.0	1.5	3.5	640	27.9	15.6	0.94	31.1	29.8	0.6	640	18.5	1.83	12.5	97	2.95	2.0
	4.0	1.5	3.5	850	29.1	18.7	0.97	32.4	30.0	0.6	850	19.0	1.68	13.3	91	3.32	2.0
	6.0	3.1	7.2	640	28.0	15.6	0.90	31.1	31.1	0.5	640	19.2	1.84	13.2	98	3.05	2.0
	6.0	3.1	7.2	850	29.2	18.7	0.93	32.4	31.3	0.6	850	19.7	1.68	14.0	91	3.42	2.1
	8.0	5.1	11.8	640	28.1	15.7	0.88	31.1	31.8	0.5	640	19.5	1.85	13.5	98	3.10	2.1
	8.0	5.1	11.8	850	29.3	18.8	0.91	32.4	32.1	0.5	850	20.0	1.69	14.3	92	3.48	2.2
40	4.0	1.3	3.0	640	27.8	15.8	1.04	31.3	26.9	1.0	640	21.4	1.87	15.2	101	3.34	2.3
	4.0	1.3	3.0	850	29.0	18.9	1.07	32.6	27.1	1.0	850	22.0	1.71	16.1	94	3.75	2.3
	6.0	2.8	6.5	640	28.0	15.8	0.99	31.4	28.5	0.9	640	22.2	1.89	16.0	102	3.45	2.3
	6.0	2.8	6.5	850	29.2	18.9	1.02	32.6	28.7	0.9	850	22.8	1.72	17.0	95	3.87	2.4
	8.0	4.5	10.4	640	28.2	15.8	0.96	31.4	29.3	0.8	640	22.6	1.89	16.4	103	3.51	2.4
	8.0	4.5	10.4	850	29.3	18.9	0.99	32.7	29.5	0.9	850	23.3	1.73	17.4	95	3.94	2.5
50	4.0	1.3	3.0	640	27.6	15.9	1.15	31.5	24.1	1.5	640	24.2	1.92	17.8	105	3.71	2.6
	4.0	1.3	3.0	850	28.7	19.0	1.18	32.7	24.3	1.6	850	24.9	1.75	18.9	97	4.16	2.6
	6.0	2.6	6.0	640	27.8	15.9	1.08	31.5	25.7	1.4	640	25.2	1.93	18.7	106	3.82	2.7
	6.0	2.6	6.0	850	29.0	19.1	1.12	32.8	25.9	1.5	850	25.9	1.76	19.9	98	4.29	2.7
	8.0	4.3	9.9	640	27.9	15.9	1.06	31.5	26.5	1.3	640	25.7	1.94	19.2	107	3.89	2.8
	8.0	4.3	9.9	850	29.1	19.1	1.09	32.8	26.7	1.3	850	26.4	1.77	20.3	99	4.36	2.8
60	4.0	1.2	2.8	640	26.9	15.9	1.27	31.2	21.1	2.1	640	27.0	1.96	20.4	109	4.05	2.9
	4.0	1.2	2.8	850	28.0	19.1	1.32	32.5	21.3	2.2	850	27.7	1.79	21.7	100	4.54	3.0
	6.0	2.5	5.8	640	27.3	15.9	1.20	31.4	22.7	1.9	640	28.1	1.97	21.4	111	4.17	3.0
	6.0	2.5	5.8	850	28.4	19.1	1.24	32.6	22.9	2.0	850	28.8	1.80	22.7	101	4.68	3.1
	8.0	4.0	9.2	640	27.5	15.9	1.17	31.4	23.5	1.7	640	28.6	1.98	21.9	111	4.23	3.1
	8.0	4.0	9.2	850	28.6	19.1	1.21	32.7	23.7	1.8	850	29.4	1.81	23.2	102	4.75	3.2
70	4.0	1.1	2.5	640	26.0	15.8	1.42	30.8	18.2	2.8	640	29.7	2.00	22.9	113	4.36	3.2
	4.0	1.1	2.5	850	27.0	18.9	1.47	32.0	18.4	3.0	850	30.5	1.83	24.3	103	4.89	3.3
	6.0	2.3	5.3	640	26.5	15.9	1.34	31.1	19.8	2.5	640	30.8	2.02	23.9	115	4.48	3.3
	6.0	2.3	5.3	850	27.6	19.0	1.39	32.3	19.9	2.6	850	31.7	1.84	25.4	104	5.04	3.4
	8.0	3.8	8.8	640	26.7	15.9	1.30	31.2	20.5	2.3	640	31.4	2.02	24.5	115	4.55	3.5
	8.0	3.8	8.8	850	27.8	19.0	1.35	32.4	20.7	2.3	850	32.3	1.85	25.9	105	5.11	3.6
80	4.0	1.0	2.3	640	24.8	15.6	1.59	30.2	15.6	3.4	640	32.3	2.04	25.3	117	4.65	3.5
	4.0	1.0	2.3	850	25.8	18.6	1.65	31.5	15.7	3.5	850	33.2	1.86	26.8	106	5.22	3.6
	6.0	2.2	5.1	640	25.4	15.7	1.50	30.6	16.9	3.1	640	33.5	2.06	26.3	118	4.77	3.6
	6.0	2.2	5.1	850	26.5	18.8	1.55	31.8	17.1	3.3	850	34.4	1.88	27.9	107	5.36	3.7
	8.0	3.5	8.1	640	25.7	15.8	1.46	30.7	17.7	2.9	640	34.1	2.07	26.9	119	4.83	3.8
	8.0	3.5	8.1	850	26.8	18.9	1.51	31.9	17.8	3.0	850	35.0	1.89	28.5	108	5.43	3.9
85	4.0	1.0	2.3	640	24.1	15.4	1.69	29.9	14.3	3.8	640	33.5	2.06	26.4	119	4.78	3.7
	4.0	1.0	2.3	850	25.1	18.4	1.75	31.1	14.4	3.9	850	34.4	1.88	28.0	108	5.36	3.8
	6.0	2.2	5.0	640	24.8	15.5	1.59	30.2	15.6	3.5	640	34.7	2.08	27.5	120	4.90	3.8
	6.0	2.2	5.0	850	25.8	18.6	1.65	31.5	15.7	3.7	850	35.7	1.90	29.2	109	5.50	3.9
	8.0	3.5	8.0	640	25.1	15.6	1.55	30.4	16.2	3.2	640	35.4	2.09	28.0	121	4.96	3.9
	8.0	3.5	8.0	850	26.2	18.7	1.60	31.6	16.4	3.4	850	36.3	1.91	29.8	110	5.57	4.1
90	4.0	1.0	2.3	640	23.5	15.2	1.79	29.6	13.1	4.3	640	34.8	2.08	27.5	120	4.90	3.8
	4.0	1.0	2.3	850	24.4	18.2	1.85	30.8	13.2	4.5	850	35.7	1.90	29.2	109	5.51	3.9
	6.0	2.1	4.9	640	24.2	15.4	1.69	29.9	14.3	4.0	640	36.0	2.10	28.6	122	5.03	4.0
	6.0	2.1	4.9	850	25.2	18.4	1.74	31.1	14.4	4.2	850	37.0	1.92	30.4	110	5.64	4.1
	8.0	3.4	7.9	640	24.5	15.5	1.64	30.1	15.0	3.7	640	36.6	2.11	29.2	123	5.09	4.1
	8.0	3.4	7.9	850	25.5	18.5	1.69	31.3	15.1	3.8	850	37.6	1.93	31.0	111	5.71	4.2
100	4.0	1.0	2.3	640	21.9	14.7	2.02	28.8	10.9	4.7	Operation not recommended						
	4.0	1.0	2.3	850	22.8	17.6	2.08	30.0	11.0	4.9							
	6.0	2.0	4.6	640	22.7	14.9	1.90	29.2	12.0	4.6							
	6.0	2.0	4.6	850	23.7	17.9	1.96	30.4	12.0	4.7							
	8.0	3.2	7.4	640	23.1	15.1	1.84	29.4	12.5	4.4							
	8.0	3.2	7.4	850	24.1	18.1	1.91	30.6	12.6	4.6							
110	4.0	0.9	2.1	640	20.2	14.0	2.27	28.0	8.9	5.7							
	4.0	0.9	2.1	850	21.1	16.8	2.34	29.1	9.0	5.9							
	6.0	1.9	4.4	640	21.1	14.4	2.14	28.4	9.8	5.5							
	6.0	1.9	4.4	850	22.0	17.2	2.21	29.5	9.9	5.7							
	8.0	3.1	7.2	640	21.5	14.5	2.08	28.6	10.3	5.3							
	8.0	3.1	7.2	850	22.4	17.4	2.15	29.7	10.4	5.5							
120	4.0	0.9	2.1	640	18.4	13.2	2.55	27.1	7.2	6.7							
	4.0	0.9	2.1	850	19.2	15.8	2.64	28.2	7.3	7.0							
	6.0	1.8	4.2	640	19.3	13.6	2.41	27.5	8.0	6.5							
	6.0	1.8	4.2	850	20.1	16.3	2.49	28.6	8.1	6.7							
	8.0	3.0	6.9	640	19.7	13.8	2.35	27.8	8.4	6.2							
	8.0	3.0	6.9	850	20.6	16.5	2.42	28.9	8.5	6.5							

Interpolation is permissible; extrapolation is not.
All entering air conditions are 80°F DB and 67°F WB in cooling, and 70°F DB in heating.
AHRI/ISO certified conditions are 80.6°F DB and 66.2°F WB in cooling and 68°F DB in heating.
Table does not reflect fan or pump power corrections for AHRI/ISO conditions.
All performance is based upon the lower voltage of dual voltage rated units.
Operation below 40°F EWT is based upon a 15% methanol antifreeze solution.
Operation below 60°F EWT requires optional insulated water/refrigerant circuit.
See performance correction tables for operating conditions other than those listed above.
For operation in the shaded areas, please see the Performance Data Selection Notes.

Performance Data — GT-PG Model 024 - ECM Blower

850 CFM Nominal (Rated) Airflow Cooling, 950 CFM Nominal (Rated) Airflow Heating

Performance capacities shown in thousands of Btuh

EWT °F	GPM	WPD		Cooling - EAT 80/67°F							Heating - EAT 70°F						
		PSI	FT	Airflow CFM	TC	SC	kW	HR	EER	HW	Airflow CFM	HC	kW	HE	LAT	COP	HW
20	8.0	5.6	12.9	Operation not recommended							690	16.0	1.70	10.6	92	2.76	1.7
	8.0	5.6	12.9								950	16.5	1.57	11.2	86	3.08	1.7
30	4.0	1.5	3.5	610	28.1	16.1	0.78	30.6	35.9	0.6	690	18.1	1.73	12.5	94	3.07	2.0
	4.0	1.5	3.5	850	29.2	18.7	0.83	31.9	35.3	0.6	950	18.7	1.60	13.3	88	3.43	2.0
	6.0	3.1	7.2	610	28.1	16.1	0.76	30.6	37.1	0.5	690	18.8	1.74	13.2	95	3.17	2.1
	6.0	3.1	7.2	850	29.3	18.7	0.80	31.9	36.5	0.6	950	19.4	1.61	14.0	89	3.54	2.1
	8.0	5.1	11.8	610	28.2	16.1	0.74	30.7	38.1	0.5	690	19.2	1.74	13.5	96	3.23	2.1
	8.0	5.1	11.8	850	29.3	18.8	0.78	32.0	37.5	0.5	950	19.8	1.61	14.3	89	3.60	2.2
40	4.0	1.3	3.0	610	28.4	16.6	0.89	31.3	31.9	1.0	690	21.0	1.77	15.2	98	3.48	2.3
	4.0	1.3	3.0	850	29.5	19.3	0.94	32.7	31.3	1.0	950	21.7	1.64	16.1	91	3.89	2.3
	6.0	2.8	6.5	610	28.6	16.6	0.84	31.4	34.1	0.9	690	21.9	1.78	16.0	99	3.60	2.4
	6.0	2.8	6.5	850	29.7	19.3	0.89	32.7	33.5	0.9	950	22.5	1.65	17.0	92	4.01	2.4
	8.0	4.5	10.4	610	28.7	16.6	0.82	31.4	35.2	0.8	690	22.3	1.79	16.4	100	3.65	2.5
	8.0	4.5	10.4	850	29.9	19.3	0.86	32.8	34.6	0.9	950	23.0	1.65	17.4	92	4.08	2.5
50	4.0	1.3	3.0	610	28.2	16.7	1.00	31.5	28.1	1.5	690	23.9	1.81	17.8	102	3.86	2.6
	4.0	1.3	3.0	850	29.3	19.4	1.06	32.9	27.7	1.6	950	24.6	1.67	18.9	94	4.31	2.7
	6.0	2.6	6.0	610	28.5	16.8	0.94	31.6	30.4	1.4	690	24.8	1.83	18.7	103	3.99	2.7
	6.0	2.6	6.0	850	29.7	19.5	0.99	33.0	29.8	1.5	950	25.6	1.69	19.9	95	4.45	2.8
	8.0	4.3	9.9	610	28.6	16.8	0.91	31.7	31.5	1.3	690	25.3	1.83	19.1	104	4.05	2.8
	8.0	4.3	9.9	850	29.8	19.5	0.96	33.0	30.9	1.3	950	26.1	1.69	20.3	95	4.52	2.9
60	4.0	1.2	2.8	610	27.3	16.4	1.13	31.1	24.1	2.1	690	26.7	1.85	20.4	106	4.22	2.9
	4.0	1.2	2.8	850	28.4	19.1	1.20	32.5	23.7	2.2	950	27.5	1.71	21.7	97	4.71	3.0
	6.0	2.5	5.8	610	27.8	16.6	1.06	31.4	26.3	1.9	690	27.7	1.87	21.3	107	4.35	3.0
	6.0	2.5	5.8	850	28.9	19.3	1.12	32.7	25.8	2.0	950	28.6	1.73	22.7	98	4.85	3.1
	8.0	4.0	9.2	610	28.1	16.7	1.02	31.5	27.4	1.7	690	28.3	1.88	21.8	108	4.41	3.2
	8.0	4.0	9.2	850	29.2	19.4	1.08	32.8	26.9	1.8	950	29.1	1.73	23.2	98	4.92	3.2
70	4.0	1.1	2.5	610	26.1	16.0	1.28	30.5	20.4	2.8	690	29.4	1.89	22.8	109	4.54	3.3
	4.0	1.1	2.5	850	27.2	18.7	1.36	31.8	20.0	3.0	950	30.3	1.75	24.3	99	5.07	3.4
	6.0	2.3	5.3	610	26.8	16.3	1.20	30.8	22.3	2.5	690	30.5	1.91	23.9	111	4.67	3.4
	6.0	2.3	5.3	850	27.9	18.9	1.27	32.2	22.0	2.6	950	31.4	1.77	25.4	101	5.21	3.5
	8.0	3.8	8.8	610	27.1	16.4	1.16	31.0	23.4	2.3	690	31.1	1.92	24.4	112	4.74	3.5
	8.0	3.8	8.8	850	28.2	19.1	1.23	32.3	23.0	2.3	950	32.0	1.77	25.9	101	5.29	3.6
80	4.0	1.0	2.3	610	24.8	15.6	1.45	29.7	17.1	3.4	690	31.9	1.93	25.2	113	4.84	3.6
	4.0	1.0	2.3	850	25.8	18.1	1.54	31.0	16.8	3.5	950	32.9	1.79	26.8	102	5.40	3.7
	6.0	2.2	5.1	610	25.5	15.8	1.36	30.1	18.7	3.1	690	33.1	1.95	26.3	114	4.97	3.7
	6.0	2.2	5.1	850	26.5	18.4	1.44	31.4	18.4	3.3	950	34.1	1.80	27.9	103	5.54	3.8
	8.0	3.5	8.1	610	25.9	15.9	1.32	30.3	19.6	2.9	690	33.7	1.96	26.9	115	5.04	3.8
	8.0	3.5	8.1	850	26.9	18.6	1.39	31.6	19.3	3.0	950	34.8	1.81	28.5	104	5.62	3.9
85	4.0	1.0	2.3	610	24.0	15.3	1.55	29.3	15.5	3.8	690	33.2	1.95	26.3	114	4.98	3.7
	4.0	1.0	2.3	850	25.0	17.8	1.64	30.6	15.2	3.9	950	34.2	1.80	28.0	103	5.55	3.8
	6.0	2.2	5.0	610	24.8	15.6	1.45	29.7	17.0	3.5	690	34.3	1.97	27.4	116	5.10	3.9
	6.0	2.2	5.0	850	25.8	18.1	1.54	31.0	16.8	3.7	950	35.4	1.82	29.2	105	5.69	4.0
	8.0	3.5	8.0	610	25.1	15.7	1.41	29.9	17.9	3.2	690	35.0	1.98	28.0	117	5.17	4.0
	8.0	3.5	8.0	850	26.1	18.3	1.49	31.2	17.6	3.4	950	36.0	1.83	29.8	105	5.77	4.1
90	4.0	1.0	2.3	610	23.3	15.0	1.65	28.9	14.1	4.3	690	34.4	1.97	27.5	116	5.11	3.9
	4.0	1.0	2.3	850	24.2	17.5	1.74	30.2	13.9	4.5	950	35.5	1.82	29.2	105	5.70	4.0
	6.0	2.1	4.9	610	24.0	15.3	1.55	29.3	15.6	4.0	690	35.6	1.99	28.6	118	5.23	4.0
	6.0	2.1	4.9	850	25.0	17.8	1.63	30.6	15.3	4.2	950	36.7	1.84	30.4	106	5.84	4.1
	8.0	3.4	7.9	610	24.4	15.4	1.50	29.5	16.3	3.7	690	36.2	2.00	29.1	119	5.30	4.2
	8.0	3.4	7.9	850	25.4	18.0	1.58	30.8	16.0	3.8	950	37.3	1.85	31.0	106	5.91	4.3
100	4.0	1.0	2.3	610	21.8	14.5	1.86	28.2	11.7	4.7	Operation not recommended						
	4.0	1.0	2.3	850	22.6	16.9	1.97	29.4	11.5	4.9							
	6.0	2.0	4.6	610	22.5	14.8	1.75	28.5	12.8	4.6							
	6.0	2.0	4.6	850	23.4	17.2	1.86	29.7	12.6	4.7							
	8.0	3.2	7.4	610	22.9	14.9	1.70	28.7	13.5	4.4							
	8.0	3.2	7.4	850	23.8	17.3	1.80	29.9	13.2	4.6							
110	4.0	0.9	2.1	610	20.3	14.1	2.11	27.5	9.6	5.7							
	4.0	0.9	2.1	850	21.1	16.4	2.23	28.7	9.4	5.9							
	6.0	1.9	4.4	610	21.0	14.3	1.99	27.8	10.5	5.5							
	6.0	1.9	4.4	850	21.8	16.6	2.10	29.0	10.4	5.7							
	8.0	3.1	7.2	610	21.3	14.4	1.93	28.0	11.1	5.3							
	8.0	3.1	7.2	850	22.2	16.7	2.04	29.2	10.9	5.5							
120	4.0	0.9	2.1	610	18.9	13.7	2.39	27.1	7.9	6.7							
	4.0	0.9	2.1	850	19.7	16.0	2.52	28.3	7.8	7.0							
	6.0	1.8	4.2	610	19.5	13.9	2.25	27.3	8.7	6.5							
	6.0	1.8	4.2	850	20.3	16.2	2.38	28.5	8.5	6.7							
	8.0	3.0	6.9	610	19.9	14.0	2.19	27.4	9.1	6.2							
	8.0	3.0	6.9	850	20.6	16.3	2.31	28.6	8.9	6.5							

Interpolation is permissible; extrapolation is not.
All entering air conditions are 80°F DB and 67°F WB in cooling, and 70°F DB in heating.
AHRI/ISO certified conditions are 80.6°F DB and 66.2°F WB in cooling and 68°F DB in heating.
Table does not reflect fan or pump power corrections for AHRI/ISO conditions.
All performance is based upon the lower voltage of dual voltage rated units.
Operation below 40°F EWT is based upon a 15% methanol antifreeze solution.
Operation below 60°F EWT requires optional insulated water/refrigerant circuit.
See performance correction tables for operating conditions other than those listed above.
For operation in the shaded areas, please see the Performance Data Selection Notes.

Performance Data — GT-PG Model 030 - PSC Blower

950 CFM Nominal (Rated) Airflow Cooling,950 CFM Nominal (Rated) Airflow Heating

Performance capacities shown in thousands of Btuh

EWT °F	GPM	WPD		Cooling - EAT 80/67°F							Heating - EAT 70°F						
		PSI	FT	Airflow CFM	TC	SC	kW	HR	EER	HW	Airflow CFM	HC	kW	HE	LAT	COP	HW
20	8.0	5.6	12.9	Operation not recommended							715	19.9	2.10	13.1	96	2.78	2.0
	8.0	5.6	12.9								950	20.4	1.92	13.9	90	3.12	2.1
30	4.0	1.5	3.5	715	28.8	16.3	1.18	32.8	24.4	0.6	715	21.7	2.13	14.8	98	2.99	2.5
	4.0	1.5	3.5	950	30.0	19.5	1.22	34.1	24.6	0.6	950	22.3	1.95	15.7	92	3.36	2.5
	6.0	3.1	7.2	715	28.9	16.3	1.14	32.8	25.3	0.5	715	22.5	2.14	15.6	99	3.08	2.6
	6.0	3.1	7.2	950	30.1	19.6	1.18	34.1	25.5	0.6	950	23.1	1.96	16.5	93	3.46	2.6
	8.0	5.1	11.8	715	29.0	16.4	1.11	32.8	26.0	0.5	715	23.0	2.15	16.0	100	3.13	2.7
	8.0	5.1	11.8	950	30.2	19.6	1.15	34.1	26.2	0.5	950	23.6	1.97	16.9	93	3.52	2.7
40	4.0	1.3	3.0	715	31.0	17.8	1.30	35.5	23.9	1.0	715	24.7	2.18	17.5	102	3.32	2.9
	4.0	1.3	3.0	950	32.3	21.3	1.34	36.9	24.1	1.0	950	25.3	1.99	18.6	95	3.72	2.9
	6.0	2.8	6.5	715	31.2	17.8	1.25	35.5	24.9	0.9	715	25.6	2.20	18.4	103	3.42	3.0
	6.0	2.8	6.5	950	32.5	21.3	1.30	36.9	25.1	1.0	950	26.3	2.01	19.5	96	3.84	3.0
	8.0	4.5	10.4	715	31.4	17.8	1.22	35.5	25.7	0.8	715	26.2	2.21	18.9	104	3.47	3.1
	8.0	4.5	10.4	950	32.7	21.4	1.26	36.9	25.9	0.9	950	26.9	2.02	20.0	96	3.90	3.2
50	4.0	1.3	3.0	715	31.9	18.5	1.44	36.8	22.2	1.6	715	27.7	2.24	20.2	106	3.62	3.3
	4.0	1.3	3.0	950	33.2	22.2	1.49	38.3	22.4	1.6	950	28.4	2.05	21.4	98	4.07	3.3
	6.0	2.6	6.0	715	32.2	18.5	1.37	36.8	23.4	1.4	715	28.8	2.26	21.2	107	3.74	3.4
	6.0	2.6	6.0	950	33.5	22.2	1.42	38.3	23.6	1.5	950	29.6	2.07	22.5	99	4.19	3.5
	8.0	4.3	9.9	715	32.3	18.5	1.34	36.9	24.2	1.3	715	29.4	2.27	21.8	108	3.79	3.5
	8.0	4.3	9.9	950	33.7	22.2	1.38	38.3	24.4	1.3	950	30.2	2.08	23.1	99	4.26	3.6
60	4.0	1.2	2.8	715	31.0	18.2	1.60	36.4	19.4	2.2	715	30.6	2.30	22.9	110	3.91	3.7
	4.0	1.2	2.8	950	32.3	21.8	1.65	37.9	19.6	2.3	950	31.5	2.10	24.3	101	4.39	3.8
	6.0	2.5	5.8	715	31.7	18.5	1.51	36.8	21.1	2.0	715	31.9	2.32	24.1	111	4.03	3.8
	6.0	2.5	5.8	950	33.0	22.1	1.56	38.3	21.2	2.0	950	32.8	2.12	25.6	102	4.53	3.9
	8.0	4.0	9.2	715	32.0	18.5	1.46	36.9	21.9	1.7	715	32.6	2.34	24.7	112	4.09	4.0
	8.0	4.0	9.2	950	33.3	22.2	1.51	38.4	22.0	1.8	950	33.5	2.14	26.2	103	4.60	4.1
70	4.0	1.1	2.5	715	29.5	17.6	1.76	35.5	16.8	2.9	715	33.6	2.36	25.6	114	4.18	3.8
	4.0	1.1	2.5	950	30.7	21.1	1.81	36.9	16.9	3.0	950	34.5	2.16	27.2	104	4.69	4.0
	6.0	2.3	5.3	715	30.5	18.0	1.65	36.1	18.4	2.6	715	35.1	2.39	26.9	115	4.30	4.0
	6.0	2.3	5.3	950	31.7	21.6	1.71	37.5	18.5	2.7	950	36.0	2.18	28.5	105	4.83	4.1
	8.0	3.8	8.8	715	30.9	18.2	1.61	36.4	19.2	2.3	715	35.8	2.40	27.6	116	4.36	4.2
	8.0	3.8	8.8	950	32.2	21.8	1.66	37.8	19.4	2.4	950	36.8	2.20	29.3	106	4.90	4.3
80	4.0	1.0	2.3	715	27.7	16.8	1.94	34.3	14.3	3.5	715	36.6	2.42	28.3	117	4.43	4.2
	4.0	1.0	2.3	950	28.8	20.2	2.00	35.6	14.4	3.6	950	37.5	2.21	30.0	107	4.97	4.3
	6.0	2.2	5.1	715	28.8	17.3	1.83	35.0	15.8	3.2	715	38.1	2.46	29.6	119	4.55	4.4
	6.0	2.2	5.1	950	30.0	20.7	1.89	36.4	15.9	3.4	950	39.1	2.25	31.4	108	5.11	4.5
	8.0	3.5	8.1	715	29.3	17.5	1.77	35.4	16.6	3.0	715	38.9	2.47	30.4	120	4.61	4.5
	8.0	3.5	8.1	950	30.5	21.0	1.83	36.8	16.7	3.1	950	40.0	2.26	32.2	109	5.18	4.7
85	4.0	1.0	2.3	715	26.7	16.4	2.04	33.7	13.1	3.9	715	38.0	2.45	29.5	119	4.54	4.4
	4.0	1.0	2.3	950	27.8	19.7	2.11	35.0	13.2	4.1	950	39.0	2.24	31.4	108	5.10	4.5
	6.0	2.2	5.0	715	27.8	16.9	1.92	34.4	14.5	3.6	715	39.6	2.49	31.0	121	4.66	4.6
	6.0	2.2	5.0	950	29.0	20.2	1.99	35.8	14.6	3.8	950	40.6	2.28	32.8	110	5.23	4.7
	8.0	3.5	8.0	715	28.4	17.1	1.87	34.7	15.2	3.3	715	40.4	2.51	31.7	122	4.72	4.7
	8.0	3.5	8.0	950	29.6	20.5	1.93	36.1	15.3	3.5	950	41.5	2.30	33.6	110	5.30	4.9
90	4.0	1.0	2.3	715	25.7	16.0	2.15	33.1	12.0	4.5	715	39.4	2.49	30.8	121	4.65	4.6
	4.0	1.0	2.3	950	26.8	19.2	2.22	34.4	12.1	4.6	950	40.5	2.27	32.7	109	5.22	4.7
	6.0	2.1	4.9	715	26.9	16.5	2.02	33.8	13.3	4.1	715	41.1	2.53	32.3	123	4.77	4.7
	6.0	2.1	4.9	950	28.0	19.7	2.09	35.1	13.4	4.3	950	42.2	2.31	34.3	111	5.35	4.9
	8.0	3.4	7.9	715	27.4	16.7	1.96	34.1	14.0	3.8	715	41.9	2.55	33.0	124	4.82	4.9
	8.0	3.4	7.9	950	28.6	20.0	2.03	35.5	14.1	4.0	950	43.0	2.33	35.1	112	5.42	5.1
100	4.0	1.0	2.3	715	23.9	15.3	2.39	32.1	10.0	4.9	Operation not recommended						
	4.0	1.0	2.3	950	24.9	18.3	2.47	33.4	10.1	5.1							
	6.0	1.9	4.4	715	23.2	15.0	2.51	31.7	9.2	4.7							
	6.0	1.9	4.4	950	24.1	17.9	2.60	33.0	9.3	4.9							
	8.0	3.1	7.2	715	23.6	15.2	2.44	31.9	9.7	4.5							
	8.0	3.1	7.2	950	24.6	18.1	2.52	33.2	9.8	4.7							
110	4.0	0.9	2.1	715	22.4	14.7	2.68	31.5	8.4	5.9							
	4.0	0.9	2.1	950	23.3	17.6	2.77	32.8	8.4	6.1							
	6.0	1.9	4.4	715	23.2	15.0	2.51	31.7	9.2	5.7							
	6.0	1.9	4.4	950	24.1	17.9	2.60	33.0	9.3	5.9							
	8.0	3.1	7.2	715	23.6	15.2	2.44	31.9	9.7	5.5							
	8.0	3.1	7.2	950	24.6	18.1	2.52	33.2	9.8	5.7							
120	4.0	0.9	2.1	715	21.3	14.6	3.02	31.6	7.1	6.9							
	4.0	0.9	2.1	950	22.2	17.4	3.12	32.9	7.1	7.2							
	6.0	1.8	4.2	715	21.8	14.6	2.82	31.5	7.7	6.7							
	6.0	1.8	4.2	950	22.7	17.5	2.92	32.7	7.8	7.0							
	8.0	3.0	6.9	715	22.1	14.7	2.74	31.5	8.1	6.4							
	8.0	3.0	6.9	950	23.0	17.6	2.83	32.7	8.1	6.7							

Interpolation is permissible; extrapolation is not.
All entering air conditions are 80°F DB and 67°F WB in cooling, and 70°F DB in heating.
AHRI/ISO certified conditions are 80.6°F DB and 66.2°F WB in cooling and 68°F DB in heating.
Table does not reflect fan or pump power corrections for AHRI/ISO conditions.
All performance is based upon the lower voltage of dual voltage rated units.
Operation below 40°F EWT is based upon a 15% methanol antifreeze solution.
Operation below 60°F EWT requires optional insulated water/refrigerant circuit.
See performance correction tables for operating conditions other than those listed above.
For operation in the shaded areas, please see the Performance Data Selection Notes.

Performance Data — GT-PG Model 030 - ECM Blower

1,000 CFM Nominal (Rated) Airflow Cooling, 1,100 CFM Nominal (Rated) Airflow Heating

Performance capacities shown in thousands of Btuh

EWT °F	GPM	WPD		Cooling - EAT 80/67°F							Heating - EAT 70°F						
		PSI	FT	Airflow CFM	TC	SC	kW	HR	EER	HW	Airflow CFM	HC	kW	HE	LAT	COP	HW
20	8.0	5.6	12.9	Operation not recommended							820	19.8	2.03	13.3	92	2.86	2.2
	8.0	5.6	12.9								1100	20.4	1.88	14.1	87	3.19	2.2
30	4.0	1.5	3.5	730	29.1	17.0	1.13	32.9	25.8	0.6	820	21.8	2.05	15.1	95	3.12	2.6
	4.0	1.5	3.5	1000	30.2	19.8	1.19	34.3	25.3	0.6	1100	22.5	1.89	16.1	89	3.48	2.7
	6.0	3.1	7.2	730	29.3	17.0	1.07	32.9	27.3	0.5	820	22.7	2.06	16.0	96	3.23	2.7
	6.0	3.1	7.2	1000	30.5	19.8	1.14	34.3	26.8	0.6	1100	23.4	1.90	17.0	90	3.60	2.8
	8.0	5.1	11.8	730	29.6	17.2	1.05	33.1	28.3	0.5	820	23.2	2.07	16.4	96	3.29	2.8
	8.0	5.1	11.8	1000	30.7	20.0	1.11	34.5	27.8	0.5	1100	23.9	1.91	17.4	90	3.67	2.9
40	4.0	1.3	3.0	730	32.2	19.1	1.26	36.4	25.6	1.0	820	24.9	2.09	18.0	98	3.49	3.0
	4.0	1.3	3.0	1000	33.5	22.2	1.33	38.0	25.1	1.0	1100	25.6	1.93	19.1	92	3.90	3.1
	6.0	2.8	6.5	730	32.6	19.2	1.19	36.6	27.5	0.9	820	25.9	2.10	18.9	99	3.61	3.1
	6.0	2.8	6.5	1000	33.9	22.3	1.26	38.2	27.0	1.0	1100	26.7	1.94	20.1	92	4.03	3.2
	8.0	4.5	10.4	730	33.1	19.4	1.16	37.0	28.7	0.8	820	26.4	2.11	19.4	100	3.67	3.2
	8.0	4.5	10.4	1000	34.4	22.6	1.22	38.6	28.2	0.9	1100	27.2	1.95	20.6	93	4.10	3.3
50	4.0	1.3	3.0	730	32.3	19.3	1.39	36.9	23.2	1.6	820	27.8	2.13	20.7	101	3.83	3.4
	4.0	1.3	3.0	1000	33.5	22.4	1.47	38.5	22.8	1.6	1100	28.7	1.97	22.0	94	4.27	3.5
	6.0	2.6	6.0	730	32.7	19.4	1.31	37.1	25.0	1.4	820	29.0	2.15	21.8	103	3.96	3.6
	6.0	2.6	6.0	1000	34.0	22.6	1.38	38.7	24.6	1.5	1100	29.9	1.99	23.1	95	4.41	3.6
	8.0	4.3	9.9	730	33.1	19.6	1.27	37.4	26.1	1.3	820	29.6	2.16	22.3	103	4.02	3.7
	8.0	4.3	9.9	1000	34.5	22.9	1.34	39.0	25.7	1.3	1100	30.5	2.00	23.7	96	4.49	3.8
60	4.0	1.2	2.8	730	31.9	19.5	1.53	37.1	20.8	2.2	820	30.8	2.18	23.4	105	4.14	3.9
	4.0	1.2	2.8	1000	33.1	22.7	1.62	38.7	20.4	2.3	1100	31.8	2.01	24.9	97	4.62	4.0
	6.0	2.5	5.8	730	32.6	19.7	1.44	37.5	22.7	2.0	820	32.1	2.20	24.6	106	4.27	4.0
	6.0	2.5	5.8	1000	33.9	22.9	1.52	39.1	22.3	2.0	1100	33.1	2.04	26.2	98	4.77	4.1
	8.0	4.0	9.2	730	32.9	19.8	1.40	37.6	23.6	1.7	820	32.8	2.22	25.3	107	4.34	4.2
	8.0	4.0	9.2	1000	34.2	23.0	1.48	39.2	23.2	1.8	1100	33.8	2.05	26.8	98	4.84	4.3
70	4.0	1.1	2.5	730	30.3	18.9	1.69	36.0	17.9	2.9	820	33.8	2.23	26.1	108	4.43	4.0
	4.0	1.1	2.5	1000	31.5	22.0	1.79	37.6	17.6	3.0	1100	34.8	2.06	27.8	99	4.94	4.1
	6.0	2.3	5.3	730	31.3	19.3	1.59	36.7	19.7	2.6	820	35.2	2.26	27.5	110	4.57	4.2
	6.0	2.3	5.3	1000	32.6	22.4	1.68	38.3	19.4	2.7	1100	36.3	2.09	29.2	101	5.10	4.3
	8.0	3.8	8.8	730	31.8	19.5	1.54	37.0	20.7	2.3	820	36.0	2.28	28.2	111	4.64	4.4
	8.0	3.8	8.8	1000	33.1	22.6	1.63	38.6	20.3	2.4	1100	37.1	2.10	30.0	101	5.18	4.5
80	4.0	1.0	2.3	730	28.4	18.1	1.87	34.8	15.2	3.5	820	36.8	2.29	28.9	112	4.71	4.4
	4.0	1.0	2.3	1000	29.6	21.1	1.98	36.3	15.0	3.6	1100	37.9	2.12	30.7	102	5.25	4.5
	6.0	2.2	5.1	730	29.6	18.6	1.76	35.6	16.9	3.2	820	38.4	2.32	30.4	113	4.85	4.6
	6.0	2.2	5.1	1000	30.8	21.7	1.86	37.1	16.6	3.4	1100	39.6	2.14	32.3	103	5.41	4.7
	8.0	3.5	8.1	730	30.2	18.8	1.70	36.0	17.7	3.0	820	39.3	2.34	31.2	114	4.93	4.8
	8.0	3.5	8.1	1000	31.4	21.9	1.80	37.5	17.4	3.1	1100	40.5	2.16	33.1	104	5.50	4.9
85	4.0	1.0	2.3	730	27.5	17.8	1.97	34.2	13.9	3.9	820	38.3	2.32	30.3	113	4.84	4.6
	4.0	1.0	2.3	1000	28.6	20.7	2.08	35.7	13.7	4.1	1100	39.5	2.14	32.1	103	5.40	4.7
	6.0	2.2	5.0	730	28.6	18.2	1.85	34.9	15.4	3.6	820	40.1	2.35	31.9	115	5.00	4.8
	6.0	2.2	5.0	1000	29.8	21.2	1.96	36.4	15.2	3.8	1100	41.3	2.17	33.9	105	5.58	4.9
	8.0	3.5	8.0	730	29.2	18.5	1.80	35.3	16.3	3.3	820	41.0	2.37	32.7	116	5.08	5.0
	8.0	3.5	8.0	1000	30.4	21.5	1.90	36.8	16.0	3.5	1100	42.3	2.19	34.8	106	5.67	5.1
90	4.0	1.0	2.3	730	26.5	17.4	2.07	33.6	12.8	4.5	820	39.8	2.35	31.6	115	4.98	4.8
	4.0	1.0	2.3	1000	27.5	20.2	2.19	35.0	12.6	4.6	1100	41.1	2.17	33.6	105	5.55	4.9
	6.0	2.1	4.9	730	27.6	17.8	1.95	34.3	14.2	4.1	820	41.7	2.38	33.4	117	5.14	5.0
	6.0	2.1	4.9	1000	28.7	20.7	2.06	35.8	13.9	4.3	1100	43.0	2.20	35.5	106	5.73	5.1
	8.0	3.4	7.9	730	28.2	18.1	1.89	34.7	14.9	3.8	820	42.7	2.40	34.3	118	5.23	5.2
	8.0	3.4	7.9	1000	29.4	21.0	2.00	36.2	14.7	4.0	1100	44.1	2.21	36.5	107	5.83	5.3
100	4.0	1.0	2.3	730	24.7	16.7	2.31	32.6	10.7	4.9	Operation not recommended						
	4.0	1.0	2.3	1000	25.7	19.5	2.44	34.0	10.5	5.1							
	6.0	2.0	4.6	730	25.7	17.1	2.17	33.1	11.8	4.7							
	6.0	2.0	4.6	1000	26.7	19.9	2.30	34.6	11.6	4.9							
	8.0	3.2	7.4	730	26.2	17.3	2.10	33.4	12.5	4.5							
	8.0	3.2	7.4	1000	27.3	20.1	2.23	34.9	12.3	4.7							
110	4.0	0.9	2.1	730	23.2	16.4	2.59	32.1	9.0	5.9							
	4.0	0.9	2.1	1000	24.1	19.0	2.74	33.5	8.8	6.1							
	6.0	1.9	4.4	730	24.0	16.5	2.43	32.3	9.9	5.7							
	6.0	1.9	4.4	1000	24.9	19.2	2.57	33.7	9.7	5.9							
	8.0	3.1	7.2	730	24.4	16.6	2.35	32.5	10.4	5.5							
	8.0	3.1	7.2	1000	25.4	19.4	2.49	33.9	10.2	5.7							
120	4.0	0.9	2.1	730	22.0	16.1	2.87	31.9	7.7	6.9							
	4.0	0.9	2.1	1000	22.8	18.7	3.04	33.2	7.5	7.2							
	6.0	1.8	4.2	730	22.5	16.1	2.74	31.9	8.2	6.7							
	6.0	1.8	4.2	1000	23.4	18.8	2.90	33.3	8.1	7.0							
	8.0	3.0	6.9	730	22.7	16.2	2.67	31.9	8.5	6.4							
	8.0	3.0	6.9	1000	23.6	18.9	2.82	33.3	8.4	6.7							

Interpolation is permissible; extrapolation is not.
All entering air conditions are 80°F DB and 67°F WB in cooling, and 70°F DB in heating.
AHRI/ISO certified conditions are 80.6°F DB and 66.2°F WB in cooling and 68°F DB in heating.
Table does not reflect fan or pump power corrections for AHRI/ISO conditions.
All performance is based upon the lower voltage of dual voltage rated units.
Operation below 40°F EWT is based upon a 15% methanol antifreeze solution.
Operation below 60°F EWT requires optional insulated water/refrigerant circuit.
See performance correction tables for operating conditions other than those listed above.
For operation in the shaded areas, please see the Performance Data Selection Notes.

Performance Data — GT-PG Model 036 - PSC Blower

1,250 CFM Nominal (Rated) Airflow Cooling, 1,250 CFM Nominal (Rated) Airflow Heating

Performance capacities shown in thousands of Btuh

EWT °F	GPM	WPD		Cooling - EAT 80/67°F							Heating - EAT 70°F						
		PSI	FT	Airflow CFM	TC	SC	kW	HR	EER	HW	Airflow CFM	HC	kW	HE	LAT	COP	HW
20	9.0	5.9	13.6	Operation not recommended							940	21.7	2.41	14.0	91	2.64	2.1
	9.0	5.9	13.6								1250	22.3	2.21	14.9	87	2.96	2.2
30	4.5	1.7	3.9	940	32.8	18.6	1.49	37.9	22.0	0.6	940	24.0	2.44	16.1	94	2.88	2.5
	4.5	1.7	3.9	1250	34.1	22.3	1.54	39.4	22.2	0.6	1250	24.6	2.23	17.1	88	3.23	2.6
	6.8	3.3	7.6	940	33.1	18.6	1.43	38.0	23.2	0.6	940	24.9	2.45	16.9	94	2.97	2.6
	6.8	3.3	7.6	1250	34.5	22.3	1.48	39.5	23.4	0.6	1250	25.5	2.24	18.0	89	3.34	2.7
	9.0	5.7	13.2	940	33.3	18.7	1.40	38.1	23.8	0.5	940	25.4	2.46	17.4	95	3.02	2.7
	9.0	5.7	13.2	1250	34.7	22.4	1.45	39.6	24.0	0.6	1250	26.0	2.25	18.4	89	3.40	2.8
40	4.5	1.5	3.5	940	35.5	21.0	1.57	40.8	22.6	1.1	940	27.3	2.48	19.2	97	3.23	2.9
	4.5	1.5	3.5	1250	36.9	25.1	1.62	42.4	22.8	1.1	1250	28.1	2.27	20.4	91	3.62	3.0
	6.8	3.2	7.4	940	35.6	21.0	1.54	40.9	23.1	1.0	940	28.4	2.50	20.2	98	3.33	3.0
	6.8	3.2	7.4	1250	37.1	25.2	1.60	42.5	23.3	1.0	1250	29.2	2.29	21.5	92	3.74	3.1
	9.0	5.4	12.5	940	35.9	21.3	1.51	41.1	23.8	0.9	940	29.0	2.51	20.8	99	3.39	3.2
	9.0	5.4	12.5	1250	37.4	25.5	1.56	42.7	24.0	0.9	1250	29.8	2.29	22.0	92	3.81	3.2
50	4.5	1.3	3.0	940	35.9	21.7	1.75	41.8	20.5	1.8	940	30.8	2.53	22.4	100	3.56	3.4
	4.5	1.3	3.0	1250	37.3	26.0	1.81	43.5	20.6	1.8	1250	31.6	2.32	23.7	93	4.00	3.4
	6.8	3.1	7.2	940	36.2	21.8	1.67	41.9	21.7	1.6	940	32.1	2.56	23.6	102	3.68	3.5
	6.8	3.1	7.2	1250	37.7	26.1	1.72	43.5	21.9	1.7	1250	33.0	2.34	25.0	94	4.13	3.6
	9.0	5.2	12.0	940	36.9	22.1	1.63	42.5	22.7	1.4	940	32.8	2.57	24.2	102	3.75	3.6
	9.0	5.2	12.0	1250	38.5	26.4	1.68	44.2	22.8	1.5	1250	33.7	2.35	25.7	95	4.21	3.7
60	4.5	1.2	2.8	940	34.6	21.6	1.90	41.1	18.2	2.4	940	34.3	2.59	25.6	104	3.88	3.8
	4.5	1.2	2.8	1250	36.0	25.9	1.96	42.7	18.4	2.5	1250	35.2	2.37	27.2	96	4.36	3.9
	6.8	2.9	6.7	940	35.5	21.9	1.80	41.6	19.7	2.2	940	35.8	2.62	27.0	105	4.01	3.9
	6.8	2.9	6.7	1250	37.0	26.2	1.86	43.3	19.8	2.3	1250	36.8	2.39	28.6	97	4.51	4.0
	9.0	5.0	11.6	940	35.8	21.9	1.76	41.8	20.4	1.9	940	36.7	2.63	27.8	106	4.09	4.1
	9.0	5.0	11.6	1250	37.3	26.3	1.82	43.5	20.5	2.0	1250	37.6	2.40	29.5	98	4.59	4.2
70	4.5	1.1	2.5	940	32.8	21.0	2.06	39.9	15.9	3.3	940	37.9	2.65	28.9	107	4.19	4.2
	4.5	1.1	2.5	1250	34.2	25.1	2.13	41.4	16.0	3.4	1250	38.9	2.42	30.6	99	4.70	4.4
	6.8	2.9	6.7	940	34.0	21.4	1.96	40.7	17.4	2.9	940	39.7	2.68	30.5	109	4.33	4.4
	6.8	2.9	6.7	1250	35.4	25.6	2.02	42.3	17.5	3.1	1250	40.7	2.45	32.3	100	4.87	4.5
	9.0	4.8	11.1	940	34.5	21.6	1.91	41.0	18.1	2.6	940	40.6	2.70	31.4	110	4.41	4.6
	9.0	4.8	11.1	1250	35.9	25.9	1.97	42.7	18.2	2.7	1250	41.7	2.47	33.3	101	4.95	4.7
80	4.5	1.0	2.3	940	30.8	20.2	2.25	38.5	13.7	3.9	940	41.6	2.72	32.2	111	4.48	4.6
	4.5	1.0	2.3	1250	32.1	24.1	2.32	40.0	13.8	4.1	1250	42.7	2.48	34.2	102	5.04	4.8
	6.8	2.8	6.5	940	32.0	20.6	2.13	39.3	15.0	3.6	940	43.6	2.75	34.1	113	4.64	4.8
	6.8	2.8	6.5	1250	33.4	24.7	2.21	40.9	15.1	3.8	1250	44.8	2.52	36.1	103	5.21	4.9
	9.0	4.5	10.4	940	32.6	20.9	2.08	39.7	15.7	3.3	940	44.7	2.77	35.1	114	4.72	5.0
	9.0	4.5	10.4	1250	34.0	25.0	2.15	41.3	15.8	3.5	1250	45.9	2.54	37.2	104	5.30	5.1
85	4.5	1.0	2.2	940	29.8	19.8	2.36	37.9	12.7	4.4	940	43.4	2.75	33.9	113	4.63	4.8
	4.5	1.0	2.2	1250	31.1	23.7	2.44	39.4	12.8	4.6	1250	44.6	2.52	36.0	103	5.20	5.0
	6.8	2.7	6.2	940	31.0	20.2	2.24	38.6	13.9	4.1	940	45.6	2.79	35.9	115	4.79	5.0
	6.8	2.7	6.2	1250	32.3	24.2	2.31	40.2	14.0	4.2	1250	46.8	2.55	38.1	105	5.38	5.2
	9.0	4.5	10.3	940	31.6	20.5	2.18	39.0	14.5	3.8	940	46.8	2.82	37.0	116	4.87	5.2
	9.0	4.5	10.3	1250	32.9	24.5	2.25	40.6	14.6	3.9	1250	48.1	2.57	39.2	106	5.47	5.4
90	4.5	0.9	2.1	940	28.9	19.4	2.47	37.3	11.7	5.0	940	45.3	2.79	35.6	115	4.77	5.0
	4.5	0.9	2.1	1250	30.1	23.3	2.55	38.8	11.8	5.2	1250	46.5	2.55	37.8	104	5.35	5.2
	6.8	2.6	6.0	940	30.0	19.8	2.34	38.0	12.8	4.7	940	47.6	2.83	37.7	117	4.93	5.2
	6.8	2.6	6.0	1250	31.2	23.7	2.42	39.5	12.9	4.8	1250	48.9	2.59	40.0	106	5.54	5.4
	9.0	4.4	10.2	940	30.6	20.1	2.27	38.3	13.4	4.3	940	48.9	2.86	38.9	118	5.02	5.4
	9.0	4.4	10.2	1250	31.8	24.0	2.35	39.9	13.5	4.5	1250	50.2	2.61	41.3	107	5.64	5.6
100	4.5	0.8	1.8	940	27.3	19.0	2.72	36.6	10.0	5.5	Operation not recommended						
	4.5	0.8	1.8	1250	28.5	22.8	2.81	38.1	10.1	5.7							
	6.8	2.6	6.0	940	28.1	19.2	2.57	36.9	10.9	5.3							
	6.8	2.6	6.0	1250	29.3	23.0	2.66	38.4	11.0	5.5							
	9.0	4.2	9.7	940	28.6	19.3	2.50	37.2	11.4	5.1							
	9.0	4.2	9.7	1250	29.8	23.2	2.59	38.6	11.5	5.3							
110	4.5	0.8	1.8	940	26.4	18.9	2.99	36.6	8.8	6.6							
	4.5	0.8	1.8	1250	27.5	22.6	3.09	38.1	8.9	6.9							
	6.8	2.5	5.8	940	26.9	19.0	2.85	36.6	9.4	6.4							
	6.8	2.5	5.8	1250	28.0	22.8	2.95	38.1	9.5	6.6							
	9.0	4.0	9.2	940	27.2	19.1	2.77	36.7	9.8	6.2							
	9.0	4.0	9.2	1250	28.3	22.8	2.86	38.1	9.9	6.4							
120	4.5	0.7	1.6	940	25.8	19.3	3.33	37.2	7.7	7.8							
	4.5	0.7	1.6	1250	26.9	23.1	3.44	38.7	7.8	8.2							
	6.8	2.5	5.8	940	26.4	19.6	3.18	37.2	8.3	7.6							
	6.8	2.5	5.8	1250	27.5	23.5	3.29	38.7	8.4	7.9							
	9.0	3.8	8.8	940	26.9	19.7	3.09	37.4	8.7	7.3							
	9.0	3.8	8.8	1250	28.0	23.6	3.19	38.9	8.8	7.6							

Interpolation is permissible; extrapolation is not.
All entering air conditions are 80°F DB and 67°F WB in cooling, and 70°F DB in heating.
AHRI/ISO certified conditions are 80.6°F DB and 66.2°F WB in cooling and 68°F DB in heating.
Table does not reflect fan or pump power corrections for AHRI/ISO conditions.
All performance is based upon the lower voltage of dual voltage rated units.
Operation below 40°F EWT is based upon a 15% methanol antifreeze solution.
Operation below 60°F EWT requires optional insulated water/refrigerant circuit.
See performance correction tables for operating conditions other than those listed above.
For operation in the shaded areas, please see the Performance Data Selection Notes.

Performance Data — GT-PG Model 036 - ECM Blower

1,250 CFM Nominal (Rated) Airflow Cooling, 1,250 CFM Nominal (Rated) Airflow Heating

Performance capacities shown in thousands of Btuh

EWT °F	GPM	WPD		Cooling - EAT 80/67°F							Heating - EAT 70°F						
		PSI	FT	Airflow CFM	TC	SC	kW	HR	EER	HW	Airflow CFM	HC	kW	HE	LAT	COP	HW
20	9.0	5.9	13.6	Operation not recommended							900	21.5	2.06	14.8	92	3.06	2.1
	9.0	5.9	13.6								1250	22.1	1.90	15.7	86	3.42	2.2
30	4.5	1.7	3.9	900	33.0	19.5	1.16	36.9	28.5	0.6	900	23.7	2.09	16.9	94	3.33	2.5
	4.5	1.7	3.9	1250	34.3	22.7	1.22	38.4	28.0	0.6	1250	24.5	1.93	17.9	88	3.72	2.6
	6.8	3.3	7.6	900	33.1	19.5	1.13	36.9	29.4	0.6	900	24.7	2.10	17.8	95	3.45	2.6
	6.8	3.3	7.6	1250	34.4	22.7	1.19	38.4	28.9	0.6	1250	25.5	1.94	18.9	89	3.84	2.7
	9.0	5.7	13.2	900	33.3	19.6	1.10	36.9	30.3	0.5	900	25.3	2.11	18.3	96	3.51	2.7
	9.0	5.7	13.2	1250	34.6	22.8	1.16	38.5	29.8	0.6	1250	26.1	1.95	19.4	89	3.91	2.8
40	4.5	1.5	3.5	900	36.1	22.4	1.29	40.4	28.1	1.1	900	27.3	2.14	20.1	98	3.73	2.9
	4.5	1.5	3.5	1250	37.5	26.1	1.36	42.2	27.6	1.1	1250	28.1	1.98	21.4	91	4.17	3.0
	6.8	3.2	7.4	900	36.3	22.4	1.24	40.5	29.2	1.0	900	28.5	2.16	21.3	99	3.87	3.0
	6.8	3.2	7.4	1250	37.7	26.1	1.32	42.2	28.7	1.0	1250	29.4	2.00	22.6	92	4.32	3.1
	9.0	5.4	12.5	900	36.7	22.5	1.21	40.7	30.3	0.9	900	29.2	2.17	21.9	100	3.94	3.2
	9.0	5.4	12.5	1250	38.1	26.2	1.28	42.4	29.8	0.9	1250	30.1	2.01	23.3	92	4.40	3.2
50	4.5	1.3	3.0	900	37.1	23.9	1.42	41.9	26.1	1.8	900	30.9	2.20	23.5	102	4.12	3.4
	4.5	1.3	3.0	1250	38.6	27.9	1.51	43.7	25.6	1.8	1250	31.9	2.03	25.0	94	4.60	3.4
	6.8	3.1	7.2	900	37.4	23.8	1.37	42.0	27.3	1.6	900	32.4	2.22	24.8	103	4.27	3.5
	6.8	3.1	7.2	1250	38.9	27.7	1.45	43.8	26.9	1.7	1250	33.4	2.05	26.4	95	4.77	3.6
	9.0	5.2	12.0	900	37.6	23.8	1.33	42.1	28.3	1.4	900	33.2	2.23	25.6	104	4.35	3.6
	9.0	5.2	12.0	1250	39.1	27.6	1.41	43.9	27.8	1.5	1250	34.2	2.06	27.2	95	4.85	3.7
60	4.5	1.2	2.8	900	36.3	23.8	1.60	41.7	22.7	2.4	900	34.6	2.26	26.9	106	4.49	3.8
	4.5	1.2	2.8	1250	37.8	27.7	1.69	43.5	22.4	2.5	1250	35.7	2.09	28.6	96	5.01	3.9
	6.8	2.9	6.7	900	37.1	24.1	1.50	42.1	24.7	2.2	900	36.3	2.29	28.4	107	4.65	3.9
	6.8	2.9	6.7	1250	38.5	28.0	1.59	43.9	24.2	2.3	1250	37.4	2.11	30.2	98	5.19	4.0
	9.0	5.0	11.6	900	37.3	24.1	1.46	42.2	25.6	1.9	900	37.2	2.30	29.3	108	4.74	4.1
	9.0	5.0	11.6	1250	38.8	28.0	1.54	44.0	25.1	2.0	1250	38.4	2.13	31.1	98	5.29	4.2
70	4.5	1.1	2.5	900	34.6	23.1	1.76	40.6	19.7	3.3	900	38.3	2.32	30.3	109	4.84	4.2
	4.5	1.1	2.5	1250	36.0	26.9	1.86	42.3	19.4	3.4	1250	39.5	2.15	32.2	99	5.40	4.4
	6.8	2.9	6.7	900	35.8	23.6	1.65	41.4	21.6	2.9	900	40.2	2.35	32.0	111	5.01	4.4
	6.8	2.9	6.7	1250	37.2	27.5	1.75	43.1	21.3	3.1	1250	41.5	2.18	34.0	101	5.58	4.5
	9.0	4.8	11.1	900	36.3	23.8	1.60	41.7	22.6	2.6	900	41.2	2.37	32.9	112	5.09	4.6
	9.0	4.8	11.1	1250	37.7	27.7	1.70	43.5	22.2	2.7	1250	42.5	2.19	35.0	101	5.68	4.7
80	4.5	1.0	2.3	900	32.5	22.1	1.94	39.1	16.8	3.9	900	42.0	2.39	33.6	113	5.16	4.6
	4.5	1.0	2.3	1250	33.8	25.7	2.05	40.8	16.5	4.1	1250	43.3	2.21	35.8	102	5.75	4.8
	6.8	2.8	6.5	900	33.9	22.7	1.82	40.0	18.6	3.6	900	44.1	2.43	35.5	115	5.33	4.8
	6.8	2.8	6.5	1250	35.2	26.4	1.93	41.8	18.2	3.8	1250	45.5	2.24	37.8	104	5.94	4.9
	9.0	4.5	10.4	900	34.5	23.0	1.77	40.5	19.5	3.3	900	45.2	2.45	36.5	117	5.41	5.0
	9.0	4.5	10.4	1250	35.9	26.8	1.87	42.2	19.2	3.5	1250	46.6	2.26	38.8	105	6.04	5.1
85	4.5	1.0	2.2	900	31.4	21.5	2.04	38.4	15.4	4.4	900	43.9	2.42	35.3	115	5.30	4.8
	4.5	1.0	2.2	1250	32.7	25.1	2.16	40.0	15.1	4.6	1250	45.2	2.24	37.5	103	5.92	5.0
	6.8	2.7	6.2	900	32.7	22.2	1.92	39.3	17.0	4.1	900	46.0	2.47	37.3	117	5.47	5.0
	6.8	2.7	6.2	1250	34.0	25.8	2.03	41.0	16.7	4.2	1250	47.4	2.28	39.6	105	6.10	5.2
	9.0	4.5	10.3	900	33.4	22.5	1.86	39.7	17.9	3.8	900	47.2	2.49	38.3	119	5.55	5.2
	9.0	4.5	10.3	1250	34.7	26.2	1.97	41.4	17.6	3.9	1250	48.6	2.30	40.7	106	6.20	5.4
90	4.5	0.9	2.1	900	30.3	21.0	2.14	37.6	14.1	5.0	900	45.7	2.46	37.0	117	5.45	5.0
	4.5	0.9	2.1	1250	31.5	24.4	2.27	39.2	13.9	5.2	1250	47.1	2.27	39.3	105	6.08	5.2
	6.8	2.6	6.0	900	31.6	21.6	2.02	38.5	15.7	4.7	900	47.9	2.50	39.0	119	5.61	5.2
	6.8	2.6	6.0	1250	32.9	25.2	2.14	40.2	15.4	4.8	1250	49.4	2.31	41.4	107	6.26	5.4
	9.0	4.4	10.2	900	32.3	22.0	1.96	39.0	16.5	4.3	900	49.1	2.53	40.1	121	5.69	5.4
	9.0	4.4	10.2	1250	33.6	25.5	2.07	40.7	16.2	4.5	1250	50.6	2.34	42.6	108	6.35	5.6
100	4.5	0.8	1.8	900	28.2	20.1	2.38	36.3	11.8	5.5	Operation not recommended						
	4.5	0.8	1.8	1250	29.3	23.4	2.52	37.9	11.6	5.7							
	6.8	2.6	6.0	900	29.3	20.6	2.24	37.0	13.1	5.3							
	6.8	2.6	6.0	1250	30.5	23.9	2.37	38.6	12.9	5.5							
	9.0	4.2	9.7	900	30.0	20.9	2.18	37.4	13.8	5.1							
	9.0	4.2	9.7	1250	31.2	24.3	2.30	39.0	13.5	5.3							
110	4.5	0.8	1.8	900	26.4	19.6	2.66	35.5	9.9	6.6							
	4.5	0.8	1.8	1250	27.4	22.8	2.82	37.1	9.7	6.9							
	6.8	2.5	5.8	900	27.3	19.8	2.50	35.9	10.9	6.4							
	6.8	2.5	5.8	1250	28.4	23.0	2.65	37.4	10.7	6.6							
	9.0	4.0	9.2	900	27.8	20.0	2.43	36.1	11.5	6.2							
	9.0	4.0	9.2	1250	28.9	23.2	2.57	37.7	11.3	6.4							
120	4.5	0.7	1.6	900	25.1	19.3	2.98	35.3	8.4	7.8							
	4.5	0.7	1.6	1250	26.1	22.5	3.15	36.8	8.3	8.2							
	6.8	2.5	5.8	900	25.8	19.5	2.81	35.4	9.2	7.6							
	6.8	2.5	5.8	1250	26.8	22.7	2.97	36.9	9.0	7.9							
	9.0	3.8	8.8	900	26.1	19.5	2.72	35.5	9.6	7.3							
	9.0	3.8	8.8	1250	27.1	22.7	2.88	37.0	9.4	7.6							

Interpolation is permissible; extrapolation is not.
All entering air conditions are 80°F DB and 67°F WB in cooling, and 70°F DB in heating.
AHRI/ISO certified conditions are 80.6°F DB and 66.2°F WB in cooling and 68°F DB in heating.
Table does not reflect fan or pump power corrections for AHRI/ISO conditions.
All performance is based upon the lower voltage of dual voltage rated units.
Operation below 40°F EWT is based upon a 15% methanol antifreeze solution.
Operation below 60°F EWT requires optional insulated water/refrigerant circuit.
See performance correction tables for operating conditions other than those listed above.
For operation in the shaded areas, please see the Performance Data Selection Notes.

Performance Data — GT-PG Model 042 - PSC Blower

1,400 CFM Nominal (Rated) Airflow Cooling, 1,400 CFM Nominal (Rated) Airflow Heating

Performance capacities shown in thousands of Btuh

EWT °F	GPM	WPD		Cooling - EAT 80/67°F							Heating - EAT 70°F						
		PSI	FT	Airflow CFM	TC	SC	kW	HR	EER	HW	Airflow CFM	HC	kW	HE	LAT	COP	HW
20	11.0	4.0	9.2	Operation not recommended							1050	27.1	2.94	17.7	94	2.70	2.3
	11.0	4.0	9.2								1400	27.8	2.69	18.8	88	3.03	2.4
30	5.5	1.1	2.5	1050	38.8	23.0	1.53	44.0	25.4	0.7	1050	29.6	2.96	20.0	96	2.93	2.8
	5.5	1.1	2.5	1400	40.4	27.6	1.58	45.7	25.6	0.7	1400	30.4	2.71	21.2	90	3.28	2.8
	8.3	2.2	5.1	1050	39.4	23.0	1.51	44.5	26.1	0.7	1050	30.7	2.97	21.0	97	3.02	2.9
	8.3	2.2	5.1	1400	41.0	27.6	1.56	46.3	26.3	0.7	1400	31.5	2.72	22.3	91	3.40	3.0
	11.0	3.9	9.0	1050	39.8	23.1	1.46	44.8	27.4	0.6	1050	31.3	2.98	21.6	98	3.08	3.0
	11.0	3.9	9.0	1400	41.5	27.6	1.50	46.6	27.6	0.6	1400	32.1	2.73	22.9	91	3.46	3.1
40	5.5	1.0	2.3	1050	42.0	25.7	1.77	48.1	23.8	1.3	1050	33.8	3.01	23.9	100	3.29	3.2
	5.5	1.0	2.3	1400	43.8	30.8	1.83	50.0	24.0	1.4	1400	34.7	2.75	25.4	93	3.69	3.3
	8.3	2.1	4.9	1050	42.5	25.7	1.70	48.3	25.0	1.2	1050	35.2	3.03	25.3	101	3.41	3.3
	8.3	2.1	4.9	1400	44.3	30.7	1.76	50.3	25.2	1.3	1400	36.2	2.77	26.8	94	3.83	3.4
	11.0	3.7	8.5	1050	43.3	25.9	1.66	48.9	26.1	1.1	1050	36.0	3.04	26.0	102	3.48	3.5
	11.0	3.7	8.5	1400	45.1	31.0	1.72	50.9	26.3	1.1	1400	37.0	2.78	27.6	94	3.90	3.5
50	5.5	0.9	2.1	1050	42.5	26.6	1.99	49.3	21.3	2.2	1050	38.3	3.07	28.1	104	3.66	3.7
	5.5	0.9	2.1	1400	44.3	31.9	2.06	51.2	21.5	2.3	1400	39.3	2.81	29.8	96	4.10	3.8
	8.3	2.1	4.9	1050	43.1	26.6	1.88	49.5	22.9	2.0	1050	40.1	3.10	29.7	105	3.79	3.8
	8.3	2.1	4.9	1400	44.8	31.9	1.94	51.4	23.1	2.1	1400	41.2	2.83	31.5	97	4.26	3.9
	11.0	3.6	8.3	1050	43.6	26.7	1.83	49.8	23.8	1.8	1050	41.1	3.11	30.6	106	3.87	4.0
	11.0	3.6	8.3	1400	45.4	32.0	1.89	51.8	24.0	1.8	1400	42.2	2.85	32.5	98	4.34	4.1
60	5.5	0.9	2.1	1050	40.6	26.0	2.17	48.0	18.7	3.1	1050	43.0	3.15	32.3	108	4.00	4.2
	5.5	0.9	2.1	1400	42.3	31.1	2.24	49.9	18.9	3.2	1400	44.1	2.88	34.3	99	4.49	4.3
	8.3	2.0	4.6	1050	41.9	26.4	2.06	48.9	20.3	2.8	1050	45.1	3.19	34.2	110	4.14	4.3
	8.3	2.0	4.6	1400	43.6	31.7	2.13	50.9	20.5	2.9	1400	46.3	2.91	36.3	101	4.65	4.4
	11.0	3.5	8.1	1050	42.5	26.6	1.99	49.3	21.4	2.4	1050	45.7	3.20	34.8	110	4.18	4.5
	11.0	3.5	8.1	1400	44.3	31.9	2.05	51.3	21.6	2.5	1400	46.9	2.93	36.9	101	4.70	4.6
70	5.5	0.8	1.8	1050	38.0	24.8	2.37	46.1	16.1	4.2	1050	47.6	3.24	36.6	112	4.31	4.7
	5.5	0.8	1.8	1400	39.6	29.7	2.45	48.0	16.2	4.4	1400	48.9	2.96	38.8	102	4.84	4.8
	8.3	2.0	4.6	1050	39.6	25.5	2.25	47.3	17.6	3.7	1050	49.9	3.29	38.6	114	4.44	4.8
	8.3	2.0	4.6	1400	41.3	30.6	2.33	49.2	17.8	3.9	1400	51.2	3.01	41.0	104	4.99	5.0
	11.0	3.2	7.4	1050	40.4	25.9	2.19	47.9	18.4	3.3	1050	51.1	3.33	39.7	115	4.51	5.0
	11.0	3.2	7.4	1400	42.1	31.0	2.26	49.8	18.6	3.4	1400	52.5	3.04	42.1	105	5.06	5.2
80	5.5	0.7	1.6	1050	35.1	23.4	2.59	44.0	13.6	5.0	1050	52.1	3.35	40.5	116	4.56	5.1
	5.5	0.7	1.6	1400	36.6	28.0	2.68	45.7	13.7	5.2	1400	53.5	3.07	43.0	105	5.12	5.2
	8.3	1.9	4.4	1050	36.8	24.2	2.46	45.2	14.9	4.7	1050	54.5	3.42	42.6	118	4.66	5.3
	8.3	1.9	4.4	1400	38.3	29.0	2.54	47.0	15.1	4.8	1400	55.9	3.13	45.2	107	5.24	5.4
	11.0	3.2	7.4	1050	37.6	24.6	2.40	45.8	15.7	4.3	1050	55.7	3.46	43.7	119	4.71	5.5
	11.0	3.2	7.4	1400	39.2	29.5	2.48	47.6	15.8	4.4	1400	57.2	3.17	46.3	108	5.29	5.6
85	5.5	0.7	1.6	1050	33.7	22.7	2.70	42.9	12.5	5.7	1050	54.2	3.42	42.4	118	4.65	5.3
	5.5	0.7	1.6	1400	35.1	27.2	2.79	44.7	12.6	5.9	1400	55.6	3.12	44.9	107	5.22	5.5
	8.3	1.9	4.3	1050	35.3	23.5	2.57	44.1	13.8	5.2	1050	56.5	3.50	44.3	120	4.73	5.5
	8.3	1.9	4.3	1400	36.8	28.1	2.65	45.8	13.9	5.4	1400	58.0	3.20	47.0	108	5.32	5.7
	11.0	3.2	7.3	1050	36.1	23.9	2.50	44.7	14.5	4.8	1050	57.6	3.54	45.3	121	4.77	5.7
	11.0	3.2	7.3	1400	37.6	28.6	2.58	46.4	14.6	5.0	1400	59.2	3.24	48.1	109	5.35	5.9
90	5.5	0.7	1.6	1050	32.3	22.0	2.81	41.9	11.5	6.5	1050	56.3	3.48	44.2	120	4.73	5.5
	5.5	0.7	1.6	1400	33.6	26.4	2.91	43.6	11.6	6.7	1400	57.8	3.18	46.9	108	5.32	5.7
	8.3	1.8	4.2	1050	33.8	22.7	2.67	42.9	12.7	6.0	1050	58.5	3.57	46.0	122	4.80	5.8
	8.3	1.8	4.2	1400	35.2	27.2	2.76	44.6	12.8	6.2	1400	60.0	3.26	48.9	110	5.39	5.9
	11.0	3.1	7.2	1050	34.6	23.1	2.60	43.5	13.3	5.5	1050	59.6	3.62	46.9	123	4.82	6.0
	11.0	3.1	7.2	1400	36.0	27.7	2.69	45.2	13.4	5.7	1400	61.1	3.31	49.8	110	5.41	6.1
100	5.5	0.6	1.4	1050	29.9	21.0	3.05	40.3	9.8	7.1	Operation not recommended						
	5.5	0.6	1.4	1400	31.1	25.1	3.15	41.9	9.9	7.4							
	8.3	1.8	4.2	1050	31.0	21.5	2.90	40.9	10.7	6.9							
	8.3	1.8	4.2	1400	32.3	25.7	3.00	42.6	10.8	7.1							
	11.0	2.9	6.7	1050	31.7	21.8	2.81	41.3	11.3	6.6							
	11.0	2.9	6.7	1400	33.0	26.1	2.90	43.0	11.4	6.9							
110	5.5	0.6	1.4	1050	28.4	20.6	3.21	39.4	8.8	8.6							
	5.5	0.6	1.4	1400	29.6	24.7	3.32	40.9	8.9	8.9							
	8.3	1.7	3.9	1050	29.0	20.7	3.12	39.6	9.3	8.2							
	8.3	1.7	3.9	1400	30.2	24.8	3.22	41.2	9.4	8.6							
	11.0	2.9	6.7	1050	29.4	20.8	3.06	39.9	9.6	7.9							
	11.0	2.9	6.7	1400	30.6	24.9	3.16	41.5	9.7	8.3							
120	5.5	0.6	1.4	1050	28.0	20.9	3.33	39.4	8.4	10.1							
	5.5	0.6	1.4	1400	29.1	25.0	3.44	40.9	8.5	10.6							
	8.3	1.6	3.7	1050	28.2	20.9	3.27	39.3	8.6	9.8							
	8.3	1.6	3.7	1400	29.3	25.0	3.38	40.9	8.7	10.2							
	11.0	2.7	6.2	1050	28.4	20.9	3.25	39.5	8.8	9.4							
	11.0	2.7	6.2	1400	29.6	25.1	3.35	41.1	8.8	9.8							

Interpolation is permissible; extrapolation is not.
All entering air conditions are 80°F DB and 67°F WB in cooling, and 70°F DB in heating.
AHRI/ISO certified conditions are 80.6°F DB and 66.2°F WB in cooling and 68°F DB in heating.
Table does not reflect fan or pump power corrections for AHRI/ISO conditions.
All performance is based upon the lower voltage of dual voltage rated units.
Operation below 40°F EWT is based upon a 15% methanol antifreeze solution.
Operation below 60°F EWT requires optional insulated water/refrigerant circuit.
See performance correction tables for operating conditions other than those listed above.
For operation in the shaded areas, please see the Performance Data Selection Notes.

Performance Data — GT-PG Model 042 - ECM Blower

1,400 CFM Nominal (Rated) Airflow Cooling, 1,400 CFM Nominal (Rated) Airflow Heating

Performance capacities shown in thousands of Btuh

EWT °F	GPM	WPD		Cooling - EAT 80/67°F							Heating - EAT 70°F						
		PSI	FT	Airflow CFM	TC	SC	kW	HR	EER	HW	Airflow CFM	HC	kW	HE	LAT	COP	HW
20	11.0	4.0	9.2	Operation not recommended							1050	25.8	2.53	17.6	93	2.98	2.3
	11.0	4.0	9.2								1400	26.6	2.34	18.7	88	3.33	2.4
30	5.5	1.1	2.5	1050	42.9	27.1	1.40	47.6	30.6	0.7	1050	28.0	2.57	19.6	95	3.19	2.8
	5.5	1.1	2.5	1400	44.6	31.5	1.48	49.6	30.1	0.7	1400	28.8	2.38	20.8	89	3.55	2.8
	8.3	2.2	5.1	1050	43.2	27.1	1.33	47.6	32.4	0.7	1050	29.0	2.59	20.5	96	3.28	2.9
	8.3	2.2	5.1	1400	44.9	31.6	1.41	49.7	31.8	0.7	1400	29.9	2.39	21.8	90	3.66	3.0
	11.0	3.9	9.0	1050	43.7	27.2	1.30	48.0	33.6	0.6	1050	29.6	2.60	21.0	96	3.33	3.0
	11.0	3.9	9.0	1400	45.4	31.6	1.38	50.1	33.0	0.6	1400	30.5	2.40	22.3	90	3.72	3.1
40	5.5	1.0	2.3	1050	44.0	28.9	1.51	49.0	29.1	1.3	1050	32.1	2.64	23.3	98	3.56	3.2
	5.5	1.0	2.3	1400	45.7	33.6	1.60	51.1	28.6	1.4	1400	33.1	2.44	24.8	92	3.97	3.3
	8.3	2.1	4.9	1050	44.3	29.0	1.46	49.2	30.4	1.2	1050	33.5	2.66	24.7	100	3.69	3.3
	8.3	2.1	4.9	1400	46.1	33.8	1.54	51.3	29.9	1.3	1400	34.6	2.46	26.2	93	4.12	3.4
	11.0	3.7	8.5	1050	44.6	29.1	1.42	49.3	31.4	1.1	1050	34.4	2.68	25.4	100	3.76	3.5
	11.0	3.7	8.5	1400	46.3	33.9	1.50	51.4	30.9	1.1	1400	35.4	2.47	27.0	93	4.20	3.5
50	5.5	0.9	2.1	1050	43.3	29.5	1.69	49.0	25.7	2.2	1050	36.8	2.71	27.7	102	3.97	3.7
	5.5	0.9	2.1	1400	45.1	34.3	1.78	51.1	25.2	2.3	1400	37.9	2.51	29.4	95	4.43	3.8
	8.3	2.1	4.9	1050	44.0	29.6	1.59	49.4	27.6	2.0	1050	38.7	2.74	29.4	104	4.13	3.8
	8.3	2.1	4.9	1400	45.8	34.4	1.69	51.5	27.2	2.1	1400	39.9	2.53	31.2	96	4.61	3.9
	11.0	3.6	8.3	1050	44.3	29.6	1.55	49.4	28.6	1.8	1050	39.7	2.76	30.4	105	4.22	4.0
	11.0	3.6	8.3	1400	46.0	34.5	1.64	51.5	28.1	1.8	1400	41.0	2.55	32.3	97	4.71	4.1
60	5.5	0.9	2.1	1050	41.6	28.7	1.86	47.9	22.4	3.1	1050	41.8	2.79	32.2	107	4.39	4.2
	5.5	0.9	2.1	1400	43.3	33.4	1.96	49.9	22.0	3.2	1400	43.1	2.58	34.3	98	4.89	4.3
	8.3	2.0	4.6	1050	42.7	29.2	1.75	48.6	24.4	2.8	1050	44.0	2.83	34.3	109	4.56	4.3
	8.3	2.0	4.6	1400	44.4	34.0	1.85	50.7	24.0	2.9	1400	45.4	2.62	36.5	100	5.09	4.4
	11.0	3.5	8.1	1050	43.2	29.4	1.70	48.9	25.4	2.4	1050	45.3	2.85	35.4	110	4.65	4.5
	11.0	3.5	8.1	1400	44.9	34.2	1.80	51.0	25.0	2.5	1400	46.7	2.63	37.7	101	5.19	4.6
70	5.5	0.8	1.8	1050	39.4	27.6	2.05	46.3	19.2	4.2	1050	46.8	2.88	36.8	111	4.77	4.7
	5.5	0.8	1.8	1400	40.9	32.1	2.17	48.3	18.9	4.4	1400	48.3	2.66	39.2	102	5.32	4.8
	8.3	2.0	4.6	1050	40.7	28.3	1.93	47.3	21.1	3.7	1050	49.3	2.93	39.1	113	4.94	4.8
	8.3	2.0	4.6	1400	42.4	32.9	2.04	49.3	20.7	3.9	1400	50.8	2.70	41.6	104	5.51	5.0
	11.0	3.2	7.4	1050	41.4	28.6	1.87	47.7	22.1	3.3	1050	50.6	2.95	40.3	115	5.02	5.0
	11.0	3.2	7.4	1400	43.0	33.3	1.98	49.8	21.7	3.4	1400	52.2	2.73	42.8	105	5.60	5.2
80	5.5	0.7	1.6	1050	36.9	26.3	2.27	44.7	16.2	5.0	1050	51.6	2.97	41.2	115	5.08	5.1
	5.5	0.7	1.6	1400	38.4	30.6	2.40	46.6	16.0	5.2	1400	53.2	2.75	43.8	105	5.67	5.2
	8.3	1.9	4.4	1050	38.3	27.0	2.14	45.6	17.9	4.7	1050	54.1	3.03	43.4	118	5.23	5.3
	8.3	1.9	4.4	1400	39.9	31.5	2.26	47.6	17.6	4.8	1400	55.8	2.80	46.1	107	5.83	5.4
	11.0	3.2	7.4	1050	39.1	27.4	2.08	46.1	18.8	4.3	1050	55.3	3.07	44.5	119	5.29	5.5
	11.0	3.2	7.4	1400	40.6	31.9	2.20	48.1	18.5	4.4	1400	57.0	2.83	47.3	108	5.90	5.6
85	5.5	0.7	1.6	1050	35.7	25.7	2.40	43.9	14.8	5.7	1050	53.7	3.03	43.1	117	5.20	5.3
	5.5	0.7	1.6	1400	37.1	29.9	2.54	45.8	14.6	5.9	1400	55.4	2.80	45.8	107	5.80	5.5
	8.3	1.9	4.3	1050	37.1	26.4	2.26	44.8	16.4	5.2	1050	56.0	3.09	45.1	119	5.31	5.5
	8.3	1.9	4.3	1400	38.5	30.7	2.39	46.7	16.1	5.4	1400	57.8	2.86	47.9	108	5.93	5.7
	11.0	3.2	7.3	1050	37.8	26.8	2.20	45.2	17.2	4.8	1050	57.1	3.13	46.1	120	5.35	5.7
	11.0	3.2	7.3	1400	39.3	31.1	2.32	47.2	16.9	5.0	1400	58.9	2.89	49.0	109	5.97	5.9
90	5.5	0.7	1.6	1050	34.4	25.1	2.53	43.1	13.6	6.5	1050	55.8	3.08	45.0	119	5.31	5.5
	5.5	0.7	1.6	1400	35.8	29.2	2.68	45.0	13.4	6.7	1400	57.6	2.85	47.8	108	5.93	5.7
	8.3	1.8	4.2	1050	35.8	25.7	2.39	43.9	15.0	6.0	1050	58.0	3.15	46.8	121	5.39	5.8
	8.3	1.8	4.2	1400	37.2	30.0	2.52	45.8	14.7	6.2	1400	59.8	2.91	49.8	110	6.02	5.9
	11.0	3.1	7.2	1050	36.5	26.1	2.31	44.4	15.8	5.5	1050	58.9	3.19	47.6	122	5.42	6.0
	11.0	3.1	7.2	1400	38.0	30.4	2.45	46.3	15.5	5.7	1400	60.8	2.95	50.6	110	6.04	6.1
100	5.5	0.6	1.4	1050	32.2	24.2	2.84	41.9	11.3	7.1	Operation not recommended						
	5.5	0.6	1.4	1400	33.4	28.2	3.01	43.7	11.1	7.4							
	8.3	1.8	4.2	1050	33.3	24.6	2.67	42.5	12.5	6.9							
	8.3	1.8	4.2	1400	34.6	28.7	2.83	44.3	12.3	7.1							
	11.0	2.9	6.7	1050	34.0	24.9	2.59	42.8	13.1	6.6							
	11.0	2.9	6.7	1400	35.3	29.0	2.74	44.7	12.9	6.9							
110	5.5	0.6	1.4	1050	30.3	23.9	3.20	41.4	9.5	8.6							
	5.5	0.6	1.4	1400	31.5	27.8	3.39	43.1	9.3	8.9							
	8.3	1.7	3.9	1050	31.2	24.0	3.01	41.5	10.4	8.2							
	8.3	1.7	3.9	1400	32.4	27.9	3.18	43.3	10.2	8.6							
	11.0	2.9	6.7	1050	31.7	24.1	2.91	41.7	10.9	7.9							
	11.0	2.9	6.7	1400	33.0	28.0	3.08	43.5	10.7	8.3							
120	5.5	0.6	1.4	1050	28.9	23.5	3.62	41.4	8.0	10.1							
	5.5	0.6	1.4	1400	30.1	27.4	3.83	43.2	7.9	10.6							
	8.3	1.6	3.7	1050	29.7	23.9	3.40	41.4	8.7	9.8							
	8.3	1.6	3.7	1400	30.9	27.8	3.60	43.2	8.6	10.2							
	11.0	2.7	6.2	1050	30.1	24.0	3.30	41.5	9.1	9.4							
	11.0	2.7	6.2	1400	31.3	28.0	3.49	43.3	9.0	9.8							

Interpolation is permissible; extrapolation is not.
All entering air conditions are 80°F DB and 67°F WB in cooling, and 70°F DB in heating.
AHRI/ISO certified conditions are 80.6°F DB and 66.2°F WB in cooling and 68°F DB in heating.
Table does not reflect fan or pump power corrections for AHRI/ISO conditions.
All performance is based upon the lower voltage of dual voltage rated units.
Operation below 40°F EWT is based upon a 15% methanol antifreeze solution.
Operation below 60°F EWT requires optional insulated water/refrigerant circuit.
See performance correction tables for operating conditions other than those listed above.
For operation in the shaded areas, please see the Performance Data Selection Notes.

Performance Data — GT-PG Model 048 - PSC Blower

1,600 CFM Nominal (Rated) Airflow Cooling, 1,600 CFM Nominal (Rated) Airflow Heating

Performance capacities shown in thousands of Btuh

EWT °F	GPM	WPD		Cooling - EAT 80/67°F							Heating - EAT 70°F						
		PSI	FT	Airflow CFM	TC	SC	kW	HR	EER	HW	Airflow CFM	HC	kW	HE	LAT	COP	HW
20	12.0	4.8	11.1	Operation not recommended							1200	34.4	3.80	22.2	97	2.65	2.6
	12.0	4.8	11.1								1600	35.3	3.47	23.6	90	2.98	2.7
30	6.0	1.3	3.0	1200	52.0	29.3	2.14	59.3	24.3	0.8	1200	37.1	3.84	24.7	99	2.83	3.2
	6.0	1.3	3.0	1600	54.2	35.1	2.22	61.7	24.4	0.8	1600	38.0	3.51	26.2	92	3.18	3.3
	9.0	2.6	6.0	1200	52.3	29.3	2.06	59.4	25.4	0.7	1200	38.5	3.86	26.0	100	2.92	3.3
	9.0	2.6	6.0	1600	54.5	35.1	2.13	61.7	25.6	0.7	1600	39.5	3.53	27.6	93	3.28	3.4
	12.0	4.5	10.4	1200	52.5	29.4	2.03	59.4	25.9	0.6	1200	39.3	3.87	26.8	100	2.98	3.4
	12.0	4.5	10.4	1600	54.7	35.2	2.09	61.8	26.1	0.7	1600	40.4	3.54	28.4	93	3.34	3.5
40	6.0	1.2	2.8	1200	53.2	30.3	2.32	61.1	22.9	1.5	1200	41.9	3.92	29.1	102	3.14	3.7
	6.0	1.2	2.8	1600	55.4	36.3	2.40	63.5	23.1	1.5	1600	43.0	3.58	30.9	95	3.52	3.8
	9.0	2.6	6.0	1200	53.4	30.4	2.24	61.1	23.9	1.3	1200	43.8	3.95	30.9	104	3.25	3.8
	9.0	2.6	6.0	1600	55.7	36.4	2.31	63.5	24.1	1.4	1600	45.0	3.61	32.8	96	3.65	3.9
	12.0	4.4	10.2	1200	53.7	30.4	2.18	61.1	24.6	1.2	1200	44.9	3.97	31.8	105	3.31	4.0
	12.0	4.4	10.2	1600	55.9	36.4	2.26	63.6	24.8	1.2	1600	46.1	3.63	33.8	97	3.72	4.1
50	6.0	1.1	2.5	1200	52.6	30.7	2.60	61.5	20.2	2.4	1200	47.2	4.01	33.9	106	3.45	4.2
	6.0	1.1	2.5	1600	54.8	36.8	2.69	63.9	20.4	2.5	1600	48.5	3.67	36.0	98	3.87	4.3
	9.0	2.5	5.8	1200	53.5	30.9	2.44	61.8	21.9	2.2	1200	49.6	4.06	36.1	108	3.58	4.4
	9.0	2.5	5.8	1600	55.7	37.0	2.52	64.3	22.1	2.3	1600	50.9	3.71	38.3	99	4.02	4.5
	12.0	4.2	9.7	1200	53.8	30.9	2.37	61.9	22.7	1.9	1200	50.9	4.08	37.3	109	3.65	4.6
	12.0	4.2	9.7	1600	56.0	37.0	2.45	64.3	22.9	2.0	1600	52.2	3.73	39.6	100	4.10	4.7
60	6.0	1.0	2.3	1200	50.7	30.2	2.85	60.4	17.8	3.4	1200	52.8	4.12	39.0	111	3.75	4.8
	6.0	1.0	2.3	1600	52.8	36.2	2.94	62.8	17.9	3.6	1600	54.2	3.77	41.4	101	4.22	4.9
	9.0	2.4	5.5	1200	52.1	30.6	2.67	61.2	19.5	3.1	1200	55.6	4.18	41.6	113	3.90	5.0
	9.0	2.4	5.5	1600	54.3	36.6	2.76	63.7	19.7	3.2	1600	57.1	3.82	44.1	103	4.38	5.1
	12.0	4.0	9.2	1200	52.7	30.7	2.59	61.5	20.4	2.7	1200	57.2	4.21	43.0	114	3.98	5.2
	12.0	4.0	9.2	1600	54.9	36.8	2.67	64.0	20.5	2.8	1600	58.8	3.85	45.6	104	4.47	5.3
70	6.0	1.0	2.3	1200	48.3	29.5	3.13	59.0	15.4	4.7	1200	58.6	4.24	44.2	115	4.05	5.4
	6.0	1.0	2.3	1600	50.3	35.3	3.24	61.3	15.5	4.9	1600	60.2	3.88	46.9	105	4.54	5.5
	9.0	2.3	5.3	1200	50.0	30.0	2.93	60.0	17.0	4.2	1200	61.9	4.32	47.2	118	4.20	5.6
	9.0	2.3	5.3	1600	52.1	35.9	3.03	62.4	17.2	4.3	1600	63.6	3.95	50.1	107	4.72	5.7
	12.0	3.8	8.8	1200	50.8	30.2	2.84	60.5	17.9	3.7	1200	63.8	4.36	48.9	119	4.29	5.8
	12.0	3.8	8.8	1600	52.9	36.2	2.93	62.9	18.0	3.8	1600	65.5	3.99	51.9	108	4.81	6.0
80	6.0	0.9	2.1	1200	45.7	28.7	3.45	57.5	13.2	5.6	1200	64.6	4.38	49.6	120	4.32	5.9
	6.0	0.9	2.1	1600	47.6	34.4	3.57	59.8	13.3	5.9	1600	66.3	4.01	52.6	108	4.85	6.0
	9.0	2.3	5.3	1200	47.5	29.2	3.23	58.5	14.7	5.2	1200	68.4	4.47	53.0	123	4.48	6.1
	9.0	2.3	5.3	1600	49.4	35.0	3.34	60.8	14.8	5.4	1600	70.2	4.09	56.2	111	5.03	6.3
	12.0	3.6	8.3	1200	48.3	29.5	3.13	59.0	15.5	4.8	1200	70.5	4.53	54.9	124	4.56	6.3
	12.0	3.6	8.3	1600	50.3	35.3	3.23	61.4	15.6	5.0	1600	72.4	4.14	58.3	112	5.12	6.5
85	6.0	0.9	2.1	1200	44.4	28.4	3.64	56.8	12.2	6.3	1200	67.6	4.46	52.3	122	4.45	6.1
	6.0	0.9	2.1	1600	46.2	34.0	3.76	59.1	12.3	6.6	1600	69.4	4.07	55.5	110	4.99	6.3
	9.0	2.3	5.2	1200	46.1	28.8	3.40	57.7	13.5	5.9	1200	71.7	4.56	55.9	125	4.60	6.4
	9.0	2.3	5.2	1600	48.0	34.5	3.52	60.0	13.6	6.1	1600	73.6	4.17	59.3	113	5.17	6.5
	12.0	3.6	8.2	1200	47.0	29.1	3.29	58.2	14.3	5.4	1200	73.9	4.62	57.9	127	4.69	6.6
	12.0	3.6	8.2	1600	48.9	34.8	3.40	60.6	14.4	5.6	1600	75.9	4.23	61.4	114	5.26	6.8
90	6.0	0.9	2.1	1200	43.1	28.1	3.82	56.1	11.3	7.3	1200	70.6	4.53	55.0	125	4.57	6.4
	6.0	0.9	2.1	1600	44.9	33.6	3.95	58.4	11.4	7.6	1600	72.5	4.14	58.4	112	5.13	6.6
	9.0	2.2	5.1	1200	44.8	28.4	3.57	57.0	12.5	6.7	1200	74.9	4.65	58.8	128	4.72	6.6
	9.0	2.2	5.1	1600	46.6	34.1	3.69	59.2	12.6	7.0	1600	76.9	4.25	62.4	115	5.30	6.8
	12.0	3.5	8.1	1200	45.6	28.7	3.46	57.4	13.2	6.2	1200	77.3	4.72	60.9	130	4.80	6.9
	12.0	3.5	8.1	1600	47.5	34.3	3.57	59.7	13.3	6.4	1600	79.3	4.31	64.6	116	5.39	7.1
100	6.0	0.8	1.8	1200	40.8	27.8	4.24	55.3	9.6	8.0	Operation not recommended						
	6.0	0.8	1.8	1600	42.5	33.3	4.39	57.5	9.7	8.3							
	9.0	2.1	4.9	1200	42.2	27.9	3.97	55.8	10.6	7.7							
	9.0	2.1	4.9	1600	44.0	33.4	4.10	58.0	10.7	8.0							
	12.0	3.3	7.6	1200	43.0	28.1	3.83	56.1	11.2	7.4							
	12.0	3.3	7.6	1600	44.8	33.6	3.96	58.3	11.3	7.7							
110	6.0	0.8	1.8	1200	39.2	27.8	4.68	55.2	8.4	9.6							
	6.0	0.8	1.8	1600	40.8	33.3	4.84	57.4	8.4	10.0							
	9.0	2.0	4.6	1200	40.1	27.9	4.42	55.2	9.1	9.3							
	9.0	2.0	4.6	1600	41.8	33.4	4.57	57.4	9.2	9.6							
	12.0	3.2	7.4	1200	40.7	27.9	4.27	55.3	9.5	8.9							
	12.0	3.2	7.4	1600	42.4	33.5	4.41	57.5	9.6	9.3							
120	6.0	0.7	1.6	1200	38.1	28.7	5.25	56.1	7.3	11.4							
	6.0	0.7	1.6	1600	39.7	34.4	5.42	58.3	7.3	11.8							
	9.0	1.9	4.4	1200	39.2	28.8	4.97	56.2	7.9	11.0							
	9.0	1.9	4.4	1600	40.8	34.5	5.14	58.4	7.9	11.4							
	12.0	3.0	6.9	1200	39.8	28.9	4.82	56.2	8.3	10.6							
	12.0	3.0	6.9	1600	41.4	34.6	4.98	58.5	8.3	11.0							

Interpolation is permissible; extrapolation is not.
All entering air conditions are 80°F DB and 67°F WB in cooling, and 70°F DB in heating.
AHRI/ISO certified conditions are 80.6°F DB and 66.2°F WB in cooling and 68°F DB in heating.
Table does not reflect fan or pump power corrections for AHRI/ISO conditions.
All performance is based upon the lower voltage of dual voltage rated units.
Operation below 40°F EWT is based upon a 15% methanol antifreeze solution.
Operation below 60°F EWT requires optional insulated water/refrigerant circuit.
See performance correction tables for operating conditions other than those listed above.
For operation in the shaded areas, please see the Performance Data Selection Notes.

Performance Data — GT-PG Model 048 - ECM Blower

1,550 CFM Nominal (Rated) Airflow Cooling, 1,650 CFM Nominal (Rated) Airflow Heating

Performance capacities shown in thousands of Btuh

EWT °F	GPM	WPD		Cooling - EAT 80/67°F							Heating - EAT 70°F						
		PSI	FT	Airflow CFM	TC	SC	kW	HR	EER	HW	Airflow CFM	HC	kW	HE	LAT	COP	HW
20	12.0	4.8	11.1	Operation not recommended							1200	32.9	3.41	21.9	95	2.82	2.7
	12.0	4.8	11.1								1650	33.9	3.15	23.2	89	3.15	2.7
30	6.0	1.3	3.0	1120	53.5	31.9	1.91	59.9	28.0	0.8	1200	35.4	3.47	24.2	97	2.99	3.2
	6.0	1.3	3.0	1550	55.6	37.1	2.02	62.5	27.5	0.8	1650	36.5	3.21	25.7	91	3.34	3.3
	9.0	2.6	6.0	1120	54.1	31.9	1.81	60.1	29.9	0.7	1200	36.8	3.51	25.4	98	3.08	3.3
	9.0	2.6	6.0	1550	56.2	37.1	1.91	62.7	29.4	0.7	1650	38.0	3.24	27.0	91	3.44	3.4
	12.0	4.5	10.4	1120	54.8	32.1	1.76	60.6	31.1	0.6	1200	37.6	3.52	26.2	99	3.13	3.5
	12.0	4.5	10.4	1550	56.9	37.4	1.86	63.2	30.5	0.7	1650	38.8	3.26	27.8	92	3.49	3.6
40	6.0	1.2	2.8	1120	54.3	32.8	2.09	61.3	26.0	1.5	1200	40.3	3.58	28.6	101	3.30	3.7
	6.0	1.2	2.8	1550	56.5	38.2	2.21	64.0	25.6	1.5	1650	41.6	3.31	30.4	93	3.68	3.8
	9.0	2.6	6.0	1120	54.8	32.8	1.97	61.4	27.9	1.3	1200	42.2	3.62	30.3	103	3.42	3.9
	9.0	2.6	6.0	1550	57.0	38.2	2.08	64.1	27.4	1.4	1650	43.6	3.34	32.2	94	3.82	4.0
	12.0	4.4	10.2	1120	55.1	32.8	1.91	61.4	28.8	1.2	1200	43.3	3.64	31.3	103	3.49	4.0
	12.0	4.4	10.2	1550	57.3	38.2	2.02	64.1	28.3	1.2	1650	44.7	3.36	33.3	95	3.89	4.1
50	6.0	1.1	2.5	1120	53.5	32.9	2.31	61.3	23.2	2.4	1200	45.8	3.69	33.5	105	3.64	4.3
	6.0	1.1	2.5	1550	55.6	38.3	2.44	63.9	22.8	2.5	1650	47.2	3.41	35.6	96	4.06	4.4
	9.0	2.5	5.8	1120	54.4	33.1	2.16	61.6	25.2	2.2	1200	48.2	3.74	35.7	107	3.78	4.5
	9.0	2.5	5.8	1550	56.5	38.5	2.28	64.3	24.8	2.3	1650	49.7	3.45	37.9	98	4.22	4.6
	12.0	4.2	9.7	1120	54.7	33.1	2.09	61.7	26.2	1.9	1200	49.5	3.76	36.9	108	3.86	4.6
	12.0	4.2	9.7	1550	56.8	38.5	2.21	64.3	25.7	2.0	1650	51.1	3.48	39.3	99	4.30	4.7
60	6.0	1.0	2.3	1120	51.7	32.4	2.55	60.3	20.2	3.4	1200	51.5	3.80	38.7	110	3.97	4.9
	6.0	1.0	2.3	1550	53.7	37.7	2.70	62.9	19.9	3.6	1650	53.1	3.52	41.1	100	4.43	5.0
	9.0	2.4	5.5	1120	53.0	32.8	2.38	61.0	22.3	3.1	1200	54.4	3.86	41.3	112	4.13	5.0
	9.0	2.4	5.5	1550	55.1	38.2	2.52	63.7	21.9	3.2	1650	56.1	3.57	43.9	101	4.60	5.2
	12.0	4.0	9.2	1120	53.6	32.9	2.30	61.3	23.3	2.7	1200	56.0	3.89	42.8	113	4.21	5.2
	12.0	4.0	9.2	1550	55.7	38.3	2.43	64.0	22.9	2.8	1650	57.7	3.60	45.4	102	4.70	5.4
70	6.0	1.0	2.3	1120	49.3	31.6	2.83	58.9	17.4	4.7	1200	57.3	3.92	44.0	114	4.28	5.4
	6.0	1.0	2.3	1550	51.3	36.7	3.00	61.5	17.1	4.9	1650	59.1	3.63	46.7	103	4.78	5.6
	9.0	2.3	5.3	1120	51.0	32.2	2.64	59.9	19.3	4.2	1200	60.6	3.99	46.9	117	4.45	5.7
	9.0	2.3	5.3	1550	53.0	37.4	2.79	62.5	19.0	4.3	1650	62.4	3.69	49.8	105	4.96	5.8
	12.0	3.8	8.8	1120	51.8	32.4	2.54	60.4	20.3	3.7	1200	62.3	4.03	48.5	118	4.53	5.9
	12.0	3.8	8.8	1550	53.8	37.7	2.69	63.0	20.0	3.8	1650	64.2	3.73	51.5	106	5.05	6.0
80	6.0	0.9	2.1	1120	46.6	30.6	3.15	57.3	14.8	5.6	1200	63.0	4.05	49.1	119	4.56	6.0
	6.0	0.9	2.1	1550	48.4	35.6	3.33	59.8	14.5	5.9	1650	65.0	3.74	52.2	106	5.09	6.1
	9.0	2.3	5.3	1120	48.4	31.3	2.93	58.4	16.5	5.2	1200	66.4	4.13	52.2	121	4.71	6.2
	9.0	2.3	5.3	1550	50.4	36.4	3.10	60.9	16.2	5.4	1650	68.5	3.82	55.4	108	5.26	6.4
	12.0	3.6	8.3	1120	49.3	31.6	2.83	58.9	17.4	4.8	1200	68.2	4.18	53.7	123	4.79	6.4
	12.0	3.6	8.3	1550	51.3	36.8	2.99	61.5	17.1	5.0	1650	70.3	3.86	57.1	109	5.34	6.6
85	6.0	0.9	2.1	1120	45.1	30.1	3.33	56.5	13.5	6.3	1200	65.7	4.12	51.5	121	4.68	6.2
	6.0	0.9	2.1	1550	46.9	35.0	3.52	59.0	13.3	6.6	1650	67.8	3.80	54.7	108	5.22	6.4
	9.0	2.3	5.2	1120	47.0	30.7	3.10	57.6	15.2	5.9	1200	69.1	4.20	54.5	123	4.81	6.5
	9.0	2.3	5.2	1550	48.9	35.8	3.28	60.1	14.9	6.1	1650	71.2	3.89	57.9	110	5.37	6.6
	12.0	3.6	8.2	1120	48.0	31.1	2.99	58.1	16.0	5.4	1200	70.8	4.25	56.0	125	4.88	6.7
	12.0	3.6	8.2	1550	49.8	36.2	3.17	60.6	15.7	5.6	1650	73.0	3.93	59.5	111	5.44	6.9
90	6.0	0.9	2.1	1120	43.7	29.5	3.51	55.7	12.4	7.3	1200	68.4	4.18	53.9	123	4.79	6.5
	6.0	0.9	2.1	1550	45.4	34.4	3.72	58.1	12.2	7.6	1650	70.5	3.86	57.3	110	5.35	6.7
	9.0	2.2	5.1	1120	45.6	30.2	3.27	56.8	13.9	6.7	1200	71.7	4.28	56.8	125	4.91	6.7
	9.0	2.2	5.1	1550	47.4	35.2	3.46	59.2	13.7	7.0	1650	73.9	3.95	60.4	111	5.48	6.9
	12.0	3.5	8.1	1120	46.6	30.6	3.16	57.3	14.8	6.2	1200	73.3	4.33	58.2	127	4.96	7.0
	12.0	3.5	8.1	1550	48.4	35.6	3.34	59.8	14.5	6.4	1650	75.6	4.00	61.9	112	5.54	7.2
100	6.0	0.8	1.8	1120	40.8	28.5	3.92	54.3	10.4	8.0	Operation not recommended						
	6.0	0.8	1.8	1550	42.4	33.2	4.15	56.6	10.2	8.3							
	9.0	2.1	4.9	1120	42.6	29.2	3.66	55.2	11.7	7.7							
	9.0	2.1	4.9	1550	44.3	33.9	3.87	57.5	11.5	8.0							
	12.0	3.3	7.6	1120	43.6	29.5	3.53	55.7	12.3	7.4							
	12.0	3.3	7.6	1550	45.3	34.3	3.73	58.1	12.1	7.7							
110	6.0	0.8	1.8	1120	38.0	27.7	4.39	53.1	8.6	9.6							
	6.0	0.8	1.8	1550	39.5	32.2	4.65	55.4	8.5	10.0							
	9.0	2.0	4.6	1120	39.7	28.2	4.10	53.8	9.7	9.3							
	9.0	2.0	4.6	1550	41.3	32.8	4.33	56.1	9.5	9.6							
	12.0	3.2	7.4	1120	40.6	28.5	3.95	54.2	10.3	8.9							
	12.0	3.2	7.4	1550	42.2	33.1	4.18	56.5	10.1	9.3							
120	6.0	0.7	1.6	1120	35.5	27.1	4.93	52.5	7.2	11.4							
	6.0	0.7	1.6	1550	36.9	31.6	5.21	54.8	7.1	11.8							
	9.0	1.9	4.4	1120	37.0	27.4	4.59	52.8	8.0	11.0							
	9.0	1.9	4.4	1550	38.4	31.9	4.86	55.1	7.9	11.4							
	12.0	3.0	6.9	1120	37.8	27.6	4.44	53.0	8.5	10.6							
	12.0	3.0	6.9	1550	39.3	32.1	4.69	55.3	8.4	11.0							

Interpolation is permissible; extrapolation is not.
All entering air conditions are 80°F DB and 67°F WB in cooling, and 70°F DB in heating.
AHRI/ISO certified conditions are 80.6°F DB and 66.2°F WB in cooling and 68°F DB in heating.
Table does not reflect fan or pump power corrections for AHRI/ISO conditions.
All performance is based upon the lower voltage of dual voltage rated units.
Operation below 40°F EWT is based upon a 15% methanol antifreeze solution.
Operation below 60°F EWT requires optional insulated water/refrigerant circuit.
See performance correction tables for operating conditions other than those listed above.
For operation in the shaded areas, please see the Performance Data Selection Notes.

Performance Data — GT-PG Model 060 - PSC Blower

1,950 CFM Nominal (Rated) Airflow Cooling, 1,950 CFM Nominal (Rated) Airflow Heating

Performance capacities shown in thousands of Btuh

EWT °F	GPM	WPD		Cooling - EAT 80/67°F							Heating - EAT 70°F						
		PSI	FT	Airflow CFM	TC	SC	kW	HR	EER	HW	Airflow CFM	HC	kW	HE	LAT	COP	HW
20	15.0	5.0	11.6	Operation not recommended							1465	40.8	4.43	26.6	96	2.70	2.8
	15.0	5.0	11.6								1950	41.9	4.05	28.2	90	3.03	2.9
30	7.5	0.6	1.4	1465	61.8	36.2	2.64	70.8	23.4	0.8	1465	44.1	4.50	29.6	98	2.88	3.4
	7.5	0.6	1.4	1950	64.3	43.4	2.73	73.6	23.6	0.8	1950	45.3	4.11	31.4	92	3.23	3.5
	11.3	2.3	5.3	1465	63.0	36.5	2.63	72.0	23.9	0.7	1465	45.8	4.53	31.1	99	2.96	3.5
	11.3	2.3	5.3	1950	65.6	43.7	2.72	74.9	24.1	0.8	1950	47.0	4.14	33.0	92	3.33	3.6
	15.0	4.8	11.1	1465	64.9	37.4	2.60	73.8	24.9	0.7	1465	46.7	4.55	32.0	100	3.01	3.7
	15.0	4.8	11.1	1950	67.6	44.8	2.69	76.7	25.1	0.7	1950	48.0	4.16	33.9	93	3.38	3.8
40	7.5	0.5	1.2	1465	64.9	38.6	2.86	74.6	22.7	1.5	1465	50.0	4.61	34.9	102	3.18	4.0
	7.5	0.5	1.2	1950	67.5	46.2	2.96	77.6	22.9	1.6	1950	51.3	4.22	37.0	94	3.57	4.1
	11.3	2.2	5.1	1465	65.4	38.7	2.76	74.9	23.7	1.4	1465	52.1	4.65	36.8	103	3.28	4.1
	11.3	2.2	5.1	1950	68.2	46.3	2.85	77.8	23.9	1.5	1950	53.5	4.25	39.1	95	3.69	4.2
	15.0	4.5	10.4	1465	66.0	38.8	2.72	75.3	24.3	1.3	1465	53.3	4.67	37.9	104	3.34	4.3
	15.0	4.5	10.4	1950	68.8	46.4	2.81	78.3	24.5	1.3	1950	54.7	4.27	40.2	96	3.75	4.4
50	7.5	0.4	0.9	1465	65.4	39.8	3.15	76.2	20.8	2.6	1465	56.1	4.73	40.5	105	3.48	4.5
	7.5	0.4	0.9	1950	68.1	47.6	3.26	79.2	20.9	2.7	1950	57.6	4.32	43.0	97	3.91	4.7
	11.3	2.1	4.9	1465	66.1	39.8	2.97	76.2	22.2	2.3	1465	58.7	4.77	42.9	107	3.60	4.7
	11.3	2.1	4.9	1950	68.8	47.6	3.07	79.2	22.4	2.4	1950	60.3	4.37	45.5	99	4.05	4.8
	15.0	4.3	9.9	1465	66.4	39.8	2.91	76.3	22.9	2.1	1465	60.1	4.80	44.1	108	3.67	4.9
	15.0	4.3	9.9	1950	69.2	47.6	3.00	79.4	23.0	2.1	1950	61.7	4.39	46.8	99	4.12	5.0
60	7.5	0.3	0.7	1465	64.0	39.9	3.50	76.0	18.3	3.6	1465	62.5	4.84	46.3	109	3.78	5.1
	7.5	0.3	0.7	1950	66.7	47.8	3.62	79.0	18.4	3.8	1950	64.2	4.43	49.1	100	4.24	5.3
	11.3	2.1	4.9	1465	65.3	40.1	3.26	76.4	20.0	3.3	1465	65.5	4.90	49.0	111	3.92	5.4
	11.3	2.1	4.9	1465	65.3	40.1	3.26	76.4	20.0	3.4	1465	65.5	4.90	49.0	111	3.92	5.5
	15.0	4.1	9.5	1465	65.7	40.1	3.17	76.5	20.7	2.9	1465	67.1	4.93	50.5	112	3.99	5.6
	15.0	4.1	9.5	1950	68.4	48.0	3.27	79.5	20.9	3.0	1950	68.9	4.51	53.5	103	4.48	5.7
70	7.5	0.3	0.7	1465	61.6	39.2	3.84	74.7	16.0	5.0	1465	68.9	4.97	52.0	114	4.06	5.8
	7.5	0.3	0.7	1950	64.2	46.9	3.97	77.7	16.2	5.2	1950	70.7	4.54	55.2	104	4.56	5.9
	11.3	2.0	4.6	1465	63.4	39.7	3.61	75.7	17.6	4.4	1465	72.2	5.03	55.0	116	4.20	6.0
	11.3	2.0	4.6	1950	66.0	47.6	3.73	78.7	17.7	4.6	1950	74.1	4.60	58.4	105	4.72	6.2
	15.0	3.9	9.0	1465	64.1	39.9	3.49	76.1	18.4	3.9	1465	73.9	5.07	56.6	117	4.28	6.2
	15.0	3.9	9.0	1950	66.8	47.8	3.61	79.1	18.5	4.1	1950	75.9	4.63	60.1	106	4.80	6.4
80	7.5	0.2	0.5	1465	58.6	38.1	4.23	73.1	13.9	6.0	1465	75.1	5.09	57.7	117	4.32	6.3
	7.5	0.2	0.5	1950	61.1	45.6	4.37	76.0	14.0	6.2	1950	77.1	4.65	61.2	107	4.85	6.5
	11.3	1.9	4.4	1465	60.7	38.9	3.96	74.2	15.3	5.5	1465	78.6	5.16	60.8	120	4.46	6.6
	11.3	1.9	4.4	1950	63.2	46.6	4.09	77.2	15.4	5.8	1950	80.7	4.72	64.5	108	5.01	6.8
	15.0	3.6	8.3	1465	61.7	39.2	3.83	74.8	16.1	5.1	1465	80.4	5.21	62.5	121	4.53	6.8
	15.0	3.6	8.3	1950	64.3	47.0	3.96	77.8	16.2	5.3	1950	82.6	4.76	66.3	109	5.08	7.0
85	7.5	0.2	0.5	1465	56.9	37.4	4.44	72.1	12.8	6.8	1465	78.1	5.15	60.4	119	4.44	6.6
	7.5	0.2	0.5	1950	59.3	44.8	4.59	75.0	12.9	7.0	1950	80.1	4.71	64.0	108	4.98	6.8
	11.3	1.9	4.3	1465	59.1	38.3	4.16	73.3	14.2	6.2	1465	81.6	5.23	63.5	122	4.57	6.9
	11.3	1.9	4.3	1950	61.6	45.8	4.30	76.3	14.3	6.5	1950	83.7	4.79	67.4	110	5.13	7.1
	15.0	3.6	8.2	1465	60.2	38.7	4.03	73.9	14.9	5.7	1465	83.4	5.28	65.1	123	4.63	7.1
	15.0	3.6	8.2	1950	62.7	46.3	4.17	76.9	15.0	6.0	1950	85.6	4.83	69.1	111	5.20	7.3
90	7.5	0.2	0.5	1465	55.2	36.8	4.66	71.2	11.9	7.7	1465	81.0	5.22	63.0	121	4.55	6.9
	7.5	0.2	0.5	1950	57.5	44.0	4.82	74.0	11.9	8.0	1950	83.2	4.77	66.9	109	5.11	7.1
	11.3	1.8	4.2	1465	57.5	37.7	4.37	72.4	13.2	7.1	1465	84.5	5.30	66.2	123	4.67	7.2
	11.3	1.8	4.2	1950	59.9	45.1	4.51	75.3	13.3	7.4	1950	86.8	4.85	70.2	111	5.25	7.4
	15.0	3.5	8.1	1465	58.6	38.1	4.23	73.1	13.9	6.6	1465	86.3	5.35	67.7	125	4.73	7.5
	15.0	3.5	8.1	1950	61.1	45.6	4.37	76.0	14.0	6.8	1950	88.6	4.89	71.9	112	5.31	7.6
100	7.5	0.1	0.2	1465	51.7	35.3	5.15	69.3	10.0	8.5	Operation not recommended						
	7.5	0.1	0.2	1950	53.9	42.3	5.32	72.1	10.1	8.8							
	11.3	1.8	4.2	1465	54.0	36.3	4.83	70.5	11.2	8.2							
	11.3	1.8	4.2	1950	56.2	43.4	4.99	73.3	11.3	8.5							
	15.0	3.3	7.6	1465	55.2	36.7	4.67	71.1	11.8	7.9							
	15.0	3.3	7.6	1950	57.5	44.0	4.83	74.0	11.9	8.2							
110	7.5	0.1	0.2	1465	48.2	33.8	5.70	67.7	8.5	10.2							
	7.5	0.1	0.2	1950	50.2	40.5	5.89	70.4	8.5	10.6							
	11.3	1.7	3.9	1465	50.4	34.8	5.35	68.7	9.4	9.9							
	11.3	1.7	3.9	1950	52.5	41.6	5.53	71.4	9.5	10.3							
	15.0	3.1	7.2	1465	51.5	35.2	5.18	69.2	10.0	9.5							
	15.0	3.1	7.2	1950	53.7	42.2	5.35	72.0	10.0	9.9							
120	7.5	0.0	0.0	1465	45.0	32.5	6.32	66.6	7.1	12.1							
	7.5	0.0	0.0	1950	46.9	39.0	6.53	69.2	7.2	12.6							
	11.3	1.7	3.9	1465	46.9	33.3	5.93	67.2	7.9	11.7							
	11.3	1.7	3.9	1950	48.9	39.9	6.13	69.9	8.0	12.2							
	15.0	2.9	6.7	1465	48.0	33.7	5.74	67.6	8.4	11.3							
	15.0	2.9	6.7	1950	50.0	40.4	5.94	70.3	8.4	11.7							

Interpolation is permissible; extrapolation is not.
All entering air conditions are 80°F DB and 67°F WB in cooling, and 70°F DB in heating.
AHRI/ISO certified conditions are 80.6°F DB and 66.2°F WB in cooling and 68°F DB in heating.
Table does not reflect fan or pump power corrections for AHRI/ISO conditions.
All performance is based upon the lower voltage of dual voltage rated units.
Operation below 40°F EWT is based upon a 15% methanol antifreeze solution.
Operation below 60°F EWT requires optional insulated water/refrigerant circuit.
See performance correction tables for operating conditions other than those listed above.
For operation in the shaded areas, please see the Performance Data Selection Notes.

Performance Data — GT-PG Model 060 - ECM Blower

1,825 CFM Nominal (Rated) Airflow Cooling, 2,050 CFM Nominal (Rated) Airflow Heating

Performance capacities shown in thousands of Btuh

EWT °F	GPM	WPD		Cooling - EAT 80/67°F							Heating - EAT 70°F						
		PSI	FT	Airflow CFM	TC	SC	kW	HR	EER	HW	Airflow CFM	HC	kW	HE	LAT	COP	HW
20	15.0	5.0	11.6	Operation not recommended							1470	39.6	4.02	26.6	95	2.89	2.8
	15.0	5.0	11.6								2050	40.9	3.72	28.3	88	3.22	2.9
30	7.5	0.6	1.4	1320	62.0	37.7	2.30	69.7	26.9	0.7	1470	42.9	4.09	29.5	97	3.07	3.5
	7.5	0.6	1.4	1825	64.4	43.9	2.44	72.7	26.5	0.8	2050	44.2	3.78	31.4	90	3.42	3.6
	11.3	2.3	5.3	1320	63.4	38.5	2.32	71.2	27.4	0.7	1470	44.5	4.13	31.0	98	3.16	3.6
	11.3	2.3	5.3	1825	65.9	44.8	2.45	74.2	26.9	0.7	2050	45.9	3.82	33.0	91	3.52	3.7
	15.0	4.8	11.1	1320	65.6	39.8	2.27	73.2	28.9	0.6	1470	45.4	4.15	31.8	99	3.21	3.7
	15.0	4.8	11.1	1825	68.2	46.3	2.40	76.4	28.4	0.7	2050	46.8	3.83	33.8	91	3.58	3.8
40	7.5	0.5	1.2	1320	65.6	40.3	2.57	74.2	25.5	1.5	1470	48.6	4.21	34.7	101	3.38	4.0
	7.5	0.5	1.2	1825	68.2	46.9	2.72	77.4	25.1	1.5	2050	50.1	3.89	36.9	93	3.77	4.1
	11.3	2.2	5.1	1320	66.3	40.5	2.49	74.7	26.6	1.3	1470	50.7	4.25	36.6	102	3.49	4.2
	11.3	2.2	5.1	1825	69.0	47.1	2.64	77.9	26.1	1.4	2050	52.2	3.93	38.9	94	3.90	4.3
	15.0	4.5	10.4	1320	67.1	40.9	2.45	75.3	27.4	1.2	1470	51.8	4.27	37.7	103	3.55	4.3
	15.0	4.5	10.4	1825	69.8	47.6	2.59	78.6	26.9	1.2	2050	53.4	3.95	40.0	94	3.96	4.5
50	7.5	0.4	0.9	1320	66.5	41.3	2.84	76.0	23.4	2.5	1470	54.7	4.33	40.3	104	3.70	4.6
	7.5	0.4	0.9	1825	69.1	48.1	3.00	79.3	23.0	2.6	2050	56.4	4.00	42.8	95	4.13	4.7
	11.3	2.1	4.9	1320	67.2	41.4	2.69	76.2	25.0	2.2	1470	57.2	4.38	42.6	106	3.83	4.8
	11.3	2.1	4.9	1825	69.9	48.2	2.85	79.5	24.5	2.3	2050	59.0	4.04	45.3	97	4.28	4.9
	15.0	4.3	9.9	1320	68.1	41.9	2.62	76.9	26.0	2.0	1470	58.7	4.40	43.9	107	3.90	5.0
	15.0	4.3	9.9	1825	70.8	48.7	2.77	80.2	25.5	2.0	2050	60.5	4.07	46.6	97	4.36	5.1
60	7.5	0.3	0.7	1320	65.3	41.3	3.11	75.8	21.0	3.5	1470	61.0	4.45	46.0	108	4.02	5.2
	7.5	0.3	0.7	1825	67.9	48.0	3.29	79.1	20.6	3.6	2050	62.9	4.11	48.9	98	4.49	5.4
	11.3	2.1	4.9	1320	66.5	41.6	2.93	76.4	22.7	3.1	1470	64.0	4.50	48.7	110	4.16	5.4
	11.3	2.1	4.9	1825	69.1	48.4	3.09	79.7	22.3	3.2	2050	66.0	4.16	51.8	100	4.65	5.6
	15.0	4.1	9.5	1320	66.9	41.6	2.84	76.5	23.6	2.7	1470	65.6	4.54	50.2	111	4.24	5.6
	15.0	4.1	9.5	1825	69.6	48.4	3.00	79.8	23.2	2.8	2050	67.6	4.19	53.3	101	4.73	5.8
70	7.5	0.3	0.7	1320	63.4	40.7	3.35	74.7	18.9	4.7	1470	66.1	4.55	50.7	112	4.26	5.9
	7.5	0.3	0.7	1825	65.9	47.4	3.54	77.9	18.6	4.9	2050	68.2	4.20	53.8	101	4.76	6.0
	11.3	2.0	4.6	1320	64.6	41.1	3.20	75.4	20.2	4.2	1470	70.7	4.64	54.8	115	4.47	6.1
	11.3	2.0	4.6	1825	67.2	47.8	3.38	78.7	19.9	4.4	2050	72.9	4.28	58.2	103	4.98	6.3
	15.0	3.9	9.0	1320	65.4	41.3	3.10	75.9	21.1	3.7	1470	72.4	4.67	56.4	116	4.54	6.3
	15.0	3.9	9.0	1825	68.0	48.1	3.28	79.1	20.8	3.9	2050	74.7	4.32	59.9	104	5.07	6.5
80	7.5	0.2	0.5	1320	59.7	39.5	3.76	72.5	15.9	5.7	1470	73.6	4.70	57.4	116	4.59	6.4
	7.5	0.2	0.5	1825	62.1	46.0	3.98	75.6	15.6	5.9	2050	75.9	4.34	61.0	104	5.12	6.6
	11.3	1.9	4.4	1320	61.9	40.2	3.52	73.8	17.6	5.3	1470	77.0	4.77	60.5	119	4.73	6.7
	11.3	1.9	4.4	1825	64.3	46.8	3.72	77.0	17.3	5.5	2050	79.4	4.41	64.3	106	5.28	6.9
	15.0	3.6	8.3	1320	62.9	40.6	3.40	74.4	18.5	4.8	1470	78.8	4.81	62.1	120	4.80	6.9
	15.0	3.6	8.3	1825	65.4	47.2	3.60	77.6	18.2	5.0	2050	81.3	4.45	66.0	107	5.36	7.1
85	7.5	0.2	0.5	1320	57.9	38.9	3.96	71.4	14.6	6.4	1470	76.5	4.76	60.1	118	4.71	6.7
	7.5	0.2	0.5	1825	60.2	45.3	4.19	74.5	14.4	6.7	2050	78.9	4.40	63.8	106	5.25	6.9
	11.3	1.9	4.3	1320	60.2	39.7	3.70	72.8	16.3	5.9	1470	79.9	4.84	63.1	120	4.84	7.0
	11.3	1.9	4.3	1825	62.6	46.2	3.92	75.9	16.0	6.2	2050	82.4	4.47	67.1	107	5.40	7.2
	15.0	3.6	8.2	1320	61.3	40.0	3.58	73.5	17.1	5.4	1470	81.7	4.89	64.7	121	4.90	7.3
	15.0	3.6	8.2	1825	63.7	46.6	3.79	76.6	16.8	5.7	2050	84.2	4.51	68.7	108	5.47	7.4
90	7.5	0.2	0.5	1320	56.2	38.3	4.17	70.4	13.5	7.4	1470	79.4	4.83	62.7	120	4.82	7.0
	7.5	0.2	0.5	1825	58.4	44.5	4.41	73.4	13.2	7.6	2050	81.9	4.46	66.6	107	5.38	7.2
	11.3	1.8	4.2	1320	58.5	39.1	3.89	71.8	15.0	6.8	1470	82.8	4.91	65.7	122	4.94	7.3
	11.3	1.8	4.2	1825	60.8	45.5	4.12	74.9	14.8	7.1	2050	85.4	4.54	69.8	109	5.51	7.5
	15.0	3.5	8.1	1320	59.7	39.5	3.76	72.5	15.9	6.2	1470	84.5	4.96	67.2	123	5.00	7.6
	15.0	3.5	8.1	1825	62.1	46.0	3.98	75.6	15.6	6.5	2050	87.1	4.58	71.4	109	5.57	7.8
100	7.5	0.1	0.2	1320	52.4	37.0	4.64	68.3	11.3	8.1	Operation not recommended						
	7.5	0.1	0.2	1825	54.5	43.1	4.91	71.3	11.1	8.4							
	11.3	1.8	4.2	1320	54.8	37.8	4.33	69.6	12.7	7.8							
	11.3	1.8	4.2	1825	57.0	44.0	4.58	72.6	12.4	8.1							
	15.0	3.3	7.6	1320	56.0	38.2	4.18	70.3	13.4	7.5							
	15.0	3.3	7.6	1825	58.3	44.5	4.42	73.4	13.2	7.8							
110	7.5	0.1	0.2	1320	48.6	35.8	5.20	66.5	9.3	9.7							
	7.5	0.1	0.2	1825	50.5	41.6	5.50	69.4	9.2	10.1							
	11.3	1.7	3.9	1320	50.9	36.5	4.85	67.6	10.5	9.4							
	11.3	1.7	3.9	1825	53.0	42.5	5.13	70.5	10.3	9.7							
	15.0	3.1	7.2	1320	52.2	36.9	4.68	68.2	11.2	9.0							
	15.0	3.1	7.2	1825	54.2	43.0	4.95	71.1	11.0	9.4							
120	7.5	0.0	0.0	1320	45.1	34.8	5.85	65.3	7.7	11.5							
	7.5	0.0	0.0	1825	46.9	40.5	6.19	68.1	7.6	12.0							
	11.3	1.7	3.9	1320	47.2	35.4	5.45	65.9	8.7	11.1							
	11.3	1.7	3.9	1825	49.1	41.1	5.76	68.8	8.5	11.6							
	15.0	2.9	6.7	1320	48.3	35.7	5.25	66.4	9.2	10.7							
	15.0	2.9	6.7	1825	50.2	41.5	5.56	69.2	9.0	11.1							

Interpolation is permissible; extrapolation is not.
All entering air conditions are 80°F DB and 67°F WB in cooling, and 70°F DB in heating.
AHRI/ISO certified conditions are 80.6°F DB and 66.2°F WB in cooling and 68°F DB in heating.
Table does not reflect fan or pump power corrections for AHRI/ISO conditions.
All performance is based upon the lower voltage of dual voltage rated units.
Operation below 40°F EWT is based upon a 15% methanol antifreeze solution.
Operation below 60°F EWT requires optional insulated water/refrigerant circuit.
See performance correction tables for operating conditions other than those listed above.
For operation in the shaded areas, please see the Performance Data Selection Notes.

Performance Data — GT-PG Model 070 - PSC Blower

2,100 CFM Nominal (Rated) Airflow Cooling, 2,100 CFM Nominal (Rated) Airflow Heating

Performance capacities shown in thousands of Btuh

EWT °F	GPM	WPD		Cooling - EAT 80/67°F							Heating - EAT 70°F						
		PSI	FT	Airflow CFM	TC	SC	kW	HR	EER	HW	Airflow CFM	HC	kW	HE	LAT	COP	HW
20	16.5	9.1	21.0	Operation not recommended							1575	47.0	5.12	30.6	98	2.69	3.7
	16.5	9.1	21.0								2100	48.3	4.68	32.5	91	3.02	3.8
30	8.3	2.4	5.5	1575	70.1	40.6	3.14	80.8	22.3	1.0	1575	50.7	5.21	33.9	100	2.85	4.5
	8.3	2.4	5.5	2100	73.0	48.7	3.24	84.0	22.5	1.1	2100	52.1	4.77	36.0	93	3.20	4.6
	12.4	5.2	12.0	1575	71.0	40.9	3.01	81.2	23.6	0.9	1575	52.8	5.26	35.8	101	2.94	4.7
	12.4	5.2	12.0	2100	73.9	49.0	3.11	84.5	23.7	1.0	2100	54.2	4.81	37.9	94	3.30	4.8
	16.5	8.0	18.5	1575	71.5	41.1	2.96	81.6	24.2	0.9	1575	53.9	5.28	36.8	102	2.99	4.9
	16.5	8.0	18.5	2100	74.5	49.2	3.05	84.9	24.4	0.9	2100	55.4	4.83	39.0	94	3.36	5.0
40	8.3	2.2	5.1	1575	75.2	44.0	3.37	86.7	22.3	2.2	1575	57.6	5.36	40.1	104	3.15	5.3
	8.3	2.2	5.1	2100	78.3	52.7	3.48	90.2	22.5	2.3	2100	59.2	4.91	42.6	96	3.53	5.4
	12.4	4.9	11.3	1575	75.7	44.1	3.23	86.7	23.5	2.0	1575	60.4	5.42	42.6	105	3.26	5.5
	12.4	4.9	11.3	2100	78.9	52.9	3.33	90.2	23.7	2.0	2100	62.0	4.96	45.2	97	3.66	5.6
	16.5	7.5	17.3	1575	76.0	44.2	3.15	86.7	24.1	1.7	1575	61.9	5.46	44.0	106	3.33	5.7
	16.5	7.5	17.3	2100	79.2	52.9	3.26	90.2	24.3	1.8	2100	63.6	4.99	46.7	98	3.74	5.8
50	8.3	2.0	4.6	1575	76.2	45.4	3.72	88.9	20.5	3.7	1575	65.2	5.52	47.0	108	3.46	6.0
	8.3	2.0	4.6	2100	79.4	54.4	3.85	92.5	20.6	3.9	2100	67.0	5.05	49.9	100	3.89	6.2
	12.4	4.5	10.4	1575	77.0	45.4	3.50	89.0	22.0	3.3	1575	68.7	5.60	50.1	110	3.60	6.3
	12.4	4.5	10.4	2100	80.2	54.4	3.62	92.5	22.2	3.5	2100	70.5	5.12	53.2	101	4.04	6.5
	16.5	7.0	16.2	1575	77.4	45.5	3.40	89.0	22.8	2.9	1575	70.6	5.64	51.8	112	3.67	6.5
	16.5	7.0	16.2	2100	80.6	54.5	3.51	92.5	22.9	3.1	2100	72.5	5.15	55.0	102	4.12	6.7
60	8.3	1.7	3.9	1575	73.6	44.9	4.09	87.5	18.0	5.3	1575	73.3	5.69	54.2	113	3.77	6.9
	8.3	1.7	3.9	2100	76.6	53.8	4.22	91.0	18.1	5.5	2100	75.2	5.21	57.5	103	4.24	7.1
	12.4	4.0	9.2	1575	75.7	45.5	3.82	88.7	19.8	4.7	1575	77.4	5.78	57.9	115	3.92	7.2
	12.4	4.0	9.2	2100	78.8	54.5	3.95	92.2	20.0	4.9	2100	79.4	5.29	61.5	105	4.40	7.3
	16.5	6.4	14.8	1575	76.4	45.7	3.70	89.1	20.7	4.2	1575	79.7	5.83	60.0	117	4.00	7.4
	16.5	6.4	14.8	2100	79.6	54.7	3.82	92.6	20.8	4.3	2100	81.8	5.33	63.6	106	4.50	7.6
70	8.3	1.7	3.9	1575	69.9	43.6	4.50	85.3	15.5	7.3	1575	81.5	5.87	61.6	118	4.07	7.7
	8.3	1.7	3.9	2100	72.8	52.3	4.65	88.7	15.7	7.6	2100	83.6	5.37	65.3	107	4.57	7.9
	12.4	4.0	9.2	1575	72.6	44.6	4.19	87.0	17.3	6.5	1575	86.1	5.98	65.8	121	4.22	8.0
	12.4	4.0	9.2	2100	75.7	53.4	4.34	90.4	17.5	6.8	2100	88.4	5.47	69.8	109	4.74	8.3
	16.5	6.3	14.6	1575	73.9	45.0	4.05	87.7	18.2	5.7	1575	88.7	6.04	68.0	122	4.30	8.4
	16.5	6.3	14.6	2100	76.9	53.9	4.19	91.2	18.4	5.9	2100	91.0	5.52	72.2	110	4.83	8.6
80	8.3	1.6	3.7	1575	65.7	42.0	4.97	82.7	13.2	8.8	1575	89.6	6.06	68.9	123	4.33	8.5
	8.3	1.6	3.7	2100	68.4	50.3	5.14	86.0	13.3	9.2	2100	92.0	5.54	73.1	111	4.87	8.7
	12.4	3.8	8.8	1575	68.7	43.2	4.63	84.5	14.8	8.1	1575	94.6	6.19	73.3	126	4.48	8.8
	12.4	3.8	8.8	2100	71.6	51.7	4.79	87.9	15.0	8.5	2100	97.2	5.66	77.8	113	5.03	9.1
	16.5	6.1	14.1	1575	70.2	43.7	4.47	85.4	15.7	7.5	1575	97.3	6.26	75.7	127	4.56	9.2
	16.5	6.1	14.1	2100	73.1	52.4	4.62	88.8	15.8	7.8	2100	99.9	5.72	80.3	114	5.12	9.4
85	8.3	1.6	3.7	1575	63.5	41.1	5.24	81.4	12.1	10.0	1575	93.5	6.16	72.3	125	4.45	8.8
	8.3	1.6	3.7	2100	66.2	49.2	5.42	84.7	12.2	10.4	2100	96.0	5.63	76.8	112	4.99	9.1
	12.4	3.8	8.7	1575	66.5	42.3	4.88	83.2	13.6	9.2	1575	98.6	6.30	76.8	128	4.59	9.2
	12.4	3.8	8.7	2100	69.3	50.6	5.05	86.5	13.7	9.5	2100	101.2	5.76	81.5	115	5.15	9.5
	16.5	6.0	13.9	1575	68.0	42.9	4.71	84.1	14.4	8.4	1575	101.3	6.38	79.2	130	4.65	9.6
	16.5	6.0	13.9	2100	70.9	51.4	4.87	87.5	14.5	8.8	2100	104.0	5.83	84.0	116	5.22	9.8
90	8.3	1.6	3.7	1575	61.3	40.2	5.52	80.2	11.1	11.4	1575	97.4	6.26	75.8	127	4.56	9.2
	8.3	1.6	3.7	2100	63.9	48.1	5.70	83.4	11.2	11.9	2100	100.0	5.73	80.4	114	5.12	9.5
	12.4	3.7	8.5	1575	64.3	41.4	5.14	81.9	12.5	10.5	1575	102.6	6.42	80.3	130	4.69	9.6
	12.4	3.7	8.5	2100	67.0	49.6	5.31	85.1	12.6	11.0	2100	105.3	5.87	85.2	116	5.26	9.9
	16.5	5.9	13.6	1575	65.9	42.0	4.95	82.8	13.3	9.7	1575	105.2	6.50	82.6	132	4.74	10.0
	16.5	5.9	13.6	2100	68.6	50.3	5.12	86.1	13.4	10.0	2100	108.0	5.94	87.7	118	5.33	10.3
100	8.3	1.5	3.5	1575	57.1	38.4	6.15	78.1	9.3	12.6	Operation not recommended						
	8.3	1.5	3.5	2100	59.5	46.0	6.36	81.3	9.4	13.1							
	12.4	3.5	8.1	1575	59.9	39.5	5.72	79.4	10.5	12.1							
	12.4	3.5	8.1	2100	62.3	47.4	5.91	82.6	10.5	12.6							
	16.5	5.6	12.9	1575	61.3	40.2	5.52	80.2	11.1	11.6							
	16.5	5.6	12.9	2100	63.9	48.1	5.70	83.4	11.2	12.1							
110	8.3	1.4	3.2	1575	53.5	37.1	6.89	77.1	7.8	15.2							
	8.3	1.4	3.2	2100	55.8	44.4	7.12	80.2	7.8	15.8							
	12.4	3.3	7.6	1575	55.8	37.9	6.40	77.6	8.7	14.6							
	12.4	3.3	7.6	2100	58.1	45.4	6.61	80.7	8.8	15.2							
	16.5	5.3	12.2	1575	57.0	38.4	6.17	78.1	9.2	14.1							
	16.5	5.3	12.2	2100	59.4	46.0	6.38	81.2	9.3	14.6							
120	8.3	1.3	3.0	1575	51.1	36.5	7.75	77.6	6.6	18.0							
	8.3	1.3	3.0	2100	53.2	43.7	8.01	80.7	6.6	18.7							
	12.4	3.2	7.4	1575	52.5	36.7	7.18	77.0	7.3	17.4							
	12.4	3.2	7.4	2100	54.7	44.0	7.42	80.1	7.4	18.0							
	16.5	5.1	11.8	1575	53.4	37.0	6.92	77.1	7.7	16.7							
	16.5	5.1	11.8	2100	55.6	44.3	7.15	80.1	7.8	17.4							

Interpolation is permissible; extrapolation is not.
All entering air conditions are 80°F DB and 67°F WB in cooling, and 70°F DB in heating.
AHRI/ISO certified conditions are 80.6°F DB and 66.2°F WB in cooling and 68°F DB in heating.
Table does not reflect fan or pump power corrections for AHRI/ISO conditions.
All performance is based upon the lower voltage of dual voltage rated units.
Operation below 40°F EWT is based upon a 15% methanol antifreeze solution.
Operation below 60°F EWT requires optional insulated water/refrigerant circuit.
See performance correction tables for operating conditions other than those listed above.
For operation in the shaded areas, please see the Performance Data Selection Notes.

Performance Data — GT-PG Model 070 - ECM Blower

1,950 CFM Nominal (Rated) Airflow Cooling, 2,100 CFM Nominal (Rated) Airflow Heating

Performance capacities shown in thousands of Btuh

EWT °F	GPM	WPD		Cooling - EAT 80/67°F							Heating - EAT 70°F						
		PSI	FT	Airflow CFM	TC	SC	kW	HR	EER	HW	Airflow CFM	HC	kW	HE	LAT	COP	HW
20	16.5	9.1	21.0	Operation not recommended							1520	46.2	4.80	30.7	98	2.82	3.6
	16.5	9.1	21.0								2100	47.6	4.44	32.6	91	3.14	3.7
30	8.3	2.4	5.5	1450	73.1	42.8	2.74	82.3	26.7	1.0	1520	49.9	4.89	34.0	100	2.99	4.4
	8.3	2.4	5.5	1950	76.0	49.8	2.90	85.8	26.2	1.0	2100	51.4	4.52	36.1	93	3.33	4.6
	12.4	5.2	12.0	1450	73.5	42.9	2.65	82.3	27.7	0.9	1520	52.0	4.94	35.9	102	3.08	4.6
	12.4	5.2	12.0	1450	73.5	42.9	2.65	82.3	27.7	0.9	1520	52.0	4.94	35.9	102	3.08	4.7
	16.5	8.0	18.5	1450	73.8	43.0	2.59	82.4	28.5	0.8	1520	53.1	4.97	36.9	102	3.13	4.8
	16.5	8.0	18.5	1950	76.7	50.0	2.74	86.0	28.0	0.8	2100	54.8	4.59	39.2	94	3.50	4.9
40	8.3	2.2	5.1	1450	77.1	45.3	2.94	87.0	26.3	2.1	1520	56.8	5.05	40.2	105	3.30	5.2
	8.3	2.2	5.1	1950	80.2	52.7	3.11	90.7	25.8	2.1	2100	58.6	4.67	42.8	96	3.68	5.3
	12.4	4.9	11.3	1450	77.4	45.3	2.87	87.0	27.0	1.9	1520	59.6	5.11	42.7	106	3.42	5.4
	12.4	4.9	11.3	1950	80.5	52.7	3.03	90.7	26.5	1.9	2100	61.4	4.72	45.4	97	3.81	5.5
	16.5	7.5	17.3	1450	77.6	45.3	2.80	87.0	27.7	1.7	1520	61.1	5.14	44.1	107	3.48	5.6
	16.5	7.5	17.3	1950	80.7	52.7	2.97	90.7	27.2	1.7	2100	63.0	4.75	46.9	98	3.89	5.7
50	8.3	2.0	4.6	1450	77.2	45.8	3.37	88.5	22.9	3.5	1520	64.4	5.21	47.1	109	3.62	6.0
	8.3	2.0	4.6	1950	80.2	53.3	3.56	92.3	22.5	3.7	2100	66.4	4.82	50.0	99	4.04	6.1
	12.4	4.5	10.4	1450	78.2	45.9	3.14	88.7	24.9	3.2	1520	67.8	5.29	50.2	111	3.76	6.2
	12.4	4.5	10.4	1950	81.3	53.5	3.32	92.5	24.5	3.3	2100	69.9	4.88	53.3	101	4.20	6.4
	16.5	7.0	16.2	1450	78.6	46.1	3.04	88.8	25.8	2.8	1520	69.8	5.33	51.9	112	3.84	6.4
	16.5	7.0	16.2	1950	81.7	53.6	3.22	92.6	25.4	2.9	2100	71.9	4.92	55.2	102	4.28	6.6
60	8.3	1.7	3.9	1450	74.4	45.1	3.71	86.9	20.1	5.0	1520	72.4	5.38	54.3	114	3.94	6.8
	8.3	1.7	3.9	1950	77.3	52.5	3.92	90.7	19.7	5.2	2100	74.6	4.97	57.7	103	4.40	7.0
	12.4	4.0	9.2	1450	76.6	45.7	3.45	88.2	22.2	4.5	1520	76.4	5.47	57.9	117	4.09	7.0
	12.4	4.0	9.2	1950	79.6	53.1	3.65	92.0	21.8	4.7	2100	78.8	5.06	61.6	105	4.57	7.2
	16.5	6.4	14.8	1450	77.4	45.9	3.33	88.6	23.2	4.0	1520	78.7	5.52	60.0	118	4.18	7.3
	16.5	6.4	14.8	1950	80.5	53.4	3.52	92.4	22.8	4.1	2100	81.1	5.10	63.7	106	4.66	7.5
70	8.3	1.7	3.9	1450	70.7	44.0	4.10	84.7	17.2	6.9	1520	80.4	5.56	61.5	119	4.24	7.6
	8.3	1.7	3.9	1950	73.5	51.2	4.34	88.3	16.9	7.2	2100	82.9	5.14	65.4	107	4.73	7.8
	12.4	4.0	9.2	1450	73.5	44.8	3.81	86.4	19.3	6.2	1520	85.0	5.67	65.7	122	4.39	7.9
	12.4	4.0	9.2	1950	76.4	52.1	4.03	90.1	18.9	6.4	2100	87.7	5.24	69.8	109	4.90	8.1
	16.5	6.3	14.6	1450	74.7	45.2	3.68	87.1	20.3	5.4	1520	87.5	5.73	67.9	123	4.47	8.2
	16.5	6.3	14.6	1950	77.7	52.6	3.89	90.9	20.0	5.6	2100	90.2	5.30	72.1	110	4.99	8.5
80	8.3	1.6	3.7	1450	66.6	42.5	4.56	82.1	14.6	8.4	1520	88.4	5.76	68.7	124	4.50	8.3
	8.3	1.6	3.7	1950	69.2	49.5	4.82	85.7	14.3	8.7	2100	91.2	5.32	73.0	110	5.02	8.6
	12.4	3.8	8.8	1450	69.5	43.6	4.23	83.9	16.4	7.7	1520	93.3	5.89	73.0	127	4.65	8.7
	12.4	3.8	8.8	1950	72.3	50.7	4.48	87.5	16.1	8.0	2100	96.2	5.44	77.6	112	5.18	8.9
	16.5	6.1	14.1	1450	71.0	44.0	4.08	84.8	17.4	7.1	1520	96.0	5.97	75.3	128	4.71	9.0
	16.5	6.1	14.1	1950	73.8	51.2	4.31	88.5	17.1	7.4	2100	98.9	5.51	80.1	114	5.26	9.3
85	8.3	1.6	3.7	1450	64.4	41.7	4.82	80.9	13.4	9.5	1520	92.3	5.86	72.1	126	4.61	8.7
	8.3	1.6	3.7	1950	67.0	48.5	5.10	84.4	13.1	9.8	2100	95.1	5.42	76.6	112	5.15	8.9
	12.4	3.8	8.7	1450	67.4	42.8	4.48	82.6	15.0	8.7	1520	97.2	6.01	76.4	129	4.74	9.1
	12.4	3.8	8.7	1950	70.0	49.8	4.74	86.2	14.8	9.1	2100	100.2	5.55	81.2	114	5.29	9.3
	16.5	6.0	13.9	1450	68.8	43.3	4.31	83.5	16.0	8.0	1520	99.8	6.09	78.6	131	4.80	9.4
	16.5	6.0	13.9	1950	71.6	50.4	4.56	87.1	15.7	8.3	2100	102.9	5.63	83.6	115	5.35	9.7
90	8.3	1.6	3.7	1450	62.3	40.8	5.09	79.7	12.2	10.9	1520	96.1	5.97	75.5	129	4.72	9.1
	8.3	1.6	3.7	1950	64.8	47.5	5.38	83.2	12.0	11.3	2100	99.1	5.52	80.2	114	5.26	9.3
	12.4	3.7	8.5	1450	65.2	42.0	4.72	81.3	13.8	10.0	1520	101.1	6.13	79.8	132	4.83	9.5
	12.4	3.7	8.5	1950	67.8	48.8	4.99	84.8	13.6	10.4	2100	104.2	5.66	84.8	116	5.39	9.7
	16.5	5.9	13.6	1450	66.7	42.5	4.55	82.2	14.7	9.2	1520	103.6	6.22	82.0	133	4.88	9.8
	16.5	5.9	13.6	1950	69.3	49.5	4.81	85.8	14.4	9.5	2100	106.8	5.75	87.1	117	5.45	10.1
100	8.3	1.5	3.5	1450	58.3	39.0	5.70	77.9	10.2	11.9	Operation not recommended						
	8.3	1.5	3.5	1950	60.6	45.4	6.03	81.2	10.0	12.4							
	12.4	3.5	8.1	1450	60.9	40.2	5.29	79.0	11.5	11.5							
	12.4	3.5	8.1	1950	63.3	46.8	5.59	82.4	11.3	11.9							
	16.5	5.6	12.9	1450	62.3	40.8	5.09	79.7	12.2	11.1							
	16.5	5.6	12.9	1950	64.8	47.5	5.38	83.2	12.0	11.5							
110	8.3	1.4	3.2	1450	54.9	37.4	6.42	77.0	8.6	14.4							
	8.3	1.4	3.2	1950	57.1	43.5	6.79	80.4	8.4	15.0							
	12.4	3.3	7.6	1450	57.0	38.4	5.94	77.4	9.6	13.9							
	12.4	3.3	7.6	1950	59.2	44.7	6.29	80.8	9.4	14.4							
	16.5	5.3	12.2	1450	58.2	39.0	5.72	77.8	10.2	13.4							
	16.5	5.3	12.2	1950	60.5	45.4	6.05	81.2	10.0	13.9							
120	8.3	1.3	3.0	1450	52.8	36.2	7.02	77.0	7.5	17.1							
	8.3	1.3	3.0	1950	54.9	42.1	7.42	80.3	7.4	17.8							
	12.4	3.2	7.4	1450	54.0	36.9	6.71	77.1	8.0	16.5							
	12.4	3.2	7.4	1950	56.1	42.9	7.09	80.4	7.9	17.1							
	16.5	5.1	11.8	1450	54.8	37.3	6.49	77.2	8.5	15.9							
	16.5	5.1	11.8	1950	57.0	43.5	6.86	80.5	8.3	16.5							

Interpolation is permissible; extrapolation is not.
All entering air conditions are 80°F DB and 67°F WB in cooling, and 70°F DB in heating.
AHRI/ISO certified conditions are 80.6°F DB and 66.2°F WB in cooling and 68°F DB in heating.
Table does not reflect fan or pump power corrections for AHRI/ISO conditions.
All performance is based upon the lower voltage of dual voltage rated units.
Operation below 40°F EWT is based upon a 15% methanol antifreeze solution.
Operation below 60°F EWT requires optional insulated water/refrigerant circuit.
See performance correction tables for operating conditions other than those listed above.
For operation in the shaded areas, please see the Performance Data Selection Notes.

Performance Data Selection Notes

For operation in the shaded area when water is used in lieu of an anti-freeze solution, the LWT (Leaving Water Temperature) must be calculated. Flow must be maintained to a level such that the LWT is maintained above 40°F [4.4°C] when the JW3 jumper is not clipped (see example below). This is due to the potential of the refrigerant temperature being as low as 32°F [0°C] with 40°F [4.4°C] LWT, which may lead to a nuisance cutout due to the activation of the Low Temperature Protection. JW3 should never be clipped for standard range equipment or systems without antifreeze.

Performance capacities shown in thousands of Btu

		Heating - EAT 70°F						
	HW	Airflow CFM	HC	kW	HE	LAT	COP	
		1575	47.0	5.12	30.6	98	2.69	5.
		2100	48.3	4.68	32.5	91	3.02	4.
2.3	-	1575	50.7	5.21	33.9	100	2.85	6.2
22.5	-	2100	52.1	4.77	36.0	93	3.20	5.3
23.6	-	1575	52.8	5.26	35.8	101	2.94	6.2
23.7	-	2100	54.2	4.81	37.9	94	3.30	5.3
24.2	-	1575	53.9	5.28	36.8	102	2.99	6.2
24.4	-	2100	55.4	4.83	39.0	94	3.36	5.3
22.3	-	1575	57.6	5.36	40.1	104	3.15	7.1
22.5	-	2100	59.2	4.91	42.6	96	3.53	6.1
3.5	-	1575	60.4	5.42	42.6	105	3.26	7.1
.7	-	2100	62.0	4.96	45.2	97	3.66	6.
1	-	1575	61.9	5.46	44.0	106	3.33	7
	-	2100	63.6	4.99	46.7	98	3.74	
	3.6	1575	65.2	5.52	47.0	108	3.46	
	3.8	2100	67.0	5.05	49.9	100	3.89	
	3.4	1575	68.7	5.60	50.1	110	3.60	
	5	2100	70.5	5.12	53.2	101	4.04	
		1575	70.6	5.64	51.8	112		
		2100	72.5	5.15	55.0	102		
			73.3	5.69	54.2			
				5.21				

Example:

At 50°F EWT (Entering Water Temperature) and 1.5 gpm/ton, a 3 ton unit has a HE of 22,500 Btuh. To calculate LWT, rearrange the formula for HE as follows:

HE = TD x GPM x 500, where HE = Heat of Extraction (Btuh); TD = temperature difference (EWT - LWT) and GPM = U.S. Gallons per Minute.

TD = HE/(GPM x 500)

TD = 22,500/(4.5 x 500)

TD = 10°F

LWT = EWT - TD

LWT = 50 - 10 = 40°F

In this example, as long as the EWT does not fall below 50°F, the system will operate as designed. For EWTs below 50°F, higher flow rates will be required (open loop systems, for example, require at least 2 gpm/ton when EWT is below 50°F).

Physical Data

Model	018	024	030	036	042	048	060	070
Compressor (1 Each)	Copeland Scroll							
Factory Charge HFC-410a, oz [kg]	50 [1.13]	56 [1.59]	58 [1.64]	70 [1.96]	80 [2.27]	80 [2.27]	136 [3.86]	144 [4.08]
ECM Fan Motor & Blower Wheel								
Fan Motor Type & Speeds	ECM Variable Speed							
Fan Motor, hp [W]	1/2 [373]	1/2 [373]	1/2 [373]	1/2 [373]	1/2 [373]	1 [746]	1 [746]	1 [746]
Blower Wheel Size (Dia x W), in [mm]	9 x 7 [229 x 178]	9 x 7 [229 x 178]	9 x 7 [229 x 178]	11 x 10 [279 x 254]	11 x 10 [279 x 254]	11 x 10 [279 x 254]	11 x 10 [279 x 254]	11 x 10 [279 x 254]
Water Connection Size								
Swivel - Residential Class	1”	1”	1”	1”	1”	1”	1”	1”
HWG Water Connection Size								
Swivel - Residential Class	1”	1”	1”	1”	1”	1”	1”	1”
Vertical Upflow/Downflow								
Air Coil Dimensions (H x W), in [mm]	24 x 20 [610 x 508]	28 x 20 [711 x 542]	28 x 20 [711 x 542]	28 x 25 [711 x 635]	32 x 25 [813 x 635]	32 x 25 [813 x 635]	36 x 25 [914 x 635]	36 x 25 [914 x 635]
Standard Filter - 2” [51mm] Pleated MERV11 Throwaway, in [mm]	24 x 24 [610 x 508]	28 x 24 [712 x 610]	28 x 24 [712 x 610]	28 x 30 [711 x 762]	30 x 32 [762 x 813]	30 x 32 [762 x 813]	30 x 36 [762 x 914]	30 x 36 [762 x 914]
Weight - Operating, lbs [kg]	252 [114]	266 [121]	268 [122]	327 [148]	414 [188]	416 [189]	441 [200]	443 [201]
Weight - Packaged, lbs [kg]	262 [119]	276 [125]	278 [126]	337 [153]	424 [192]	426 [193]	451 [205]	453 [206]
Horizontal								
Air Coil Dimensions (H x W), in [mm]	18 x 27 [457 x 686]	18 x 31 [457 x 787]	18 x 31 [457 x 787]	20 x 35 [508 x 889]	20 x 40 [508 x 1016]	20 x 40 [508 x 1016]	20 x 45 [508 x 1143]	20 x 45 [508 x 1143]
Standard Filter - 2” [51mm] Pleated MERV11 Throwaway, in [mm]	2 - 18 x 18 [457 x 457]	2 - 18 x 18 [457 x 457]	2 - 18 x 18 [457 x 457]	1 - 12 x 20 [305 x 508] 1 - 20 x 25 [508 x 635]	1 - 18 x 20 [457 x 508] 1 - 20 x 24 [508 x 610]	1 - 18 x 20 [457 x 508] 1 - 20 x 24 [508 x 610]	2 - 20 x 24 [508 x 610]	2 - 20 x 24 [508 x 610]
Weight - Operating, lbs [kg]	252 [114]	266 [121]	268 [122]	327 [148]	414 [188]	416 [189]	441 [200]	443 [201]
Weight - Packaged, lbs [kg]	262 [119]	276 [125]	278 [126]	337 [153]	424 [192]	426 [193]	451 [205]	453 [206]

All units have compressor mountings, TXV expansion devices, and 1/2” [12.7mm] & 3/4” [19.1mm] electrical knockouts.

Dimensions — Vertical Upflow GT-PG (50YE) Series

Vertical Upflow Model		Overall Cabinet		
		A Width	B Depth	C Height
018	in	22.4	25.6	44.6
	cm	56.8	65.1	123.2
024 - 030	in	22.4	25.6	48.5
	cm	56.8	65.1	123.2
036	in	25.4	30.6	50.5
	cm	64.5	77.8	128.3
042 - 048	in	25.4	30.6	54.5
	cm	64.5	77.8	138.4
060 - 070	in	25.4	30.6	58.5
	cm	64.5	77.8	148.6

Vertical Upflow Model		Water Connections						
		1	2	3	4	5		
		D In	E Out	F HWG IN	G HWG Out	H Condensate	Loop Water FPT	HWG FPT
018	in	2.1	10.0	13.9	16.9	7.8	1”	1”
	cm	5.2	25.4	35.2	42.9	19.8	Swivel	Swivel
024 - 030	in	2.1	10.0	13.9	16.9	7.8	1”	1”
	cm	5.2	25.4	35.2	42.9	19.7	Swivel	Swivel
036	in	3.4	10.8	15.6	18.9	7.8	1”	1”
	cm	8.6	27.5	39.7	47.9	19.7	Swivel	Swivel
042 - 048	in	3.4	10.8	15.6	18.9	7.8	1”	1”
	cm	8.6	27.5	39.7	47.9	19.7	Swivel	Swivel
060 - 070	in	3.4	10.8	15.6	18.9	7.8	1”	1”
	cm	8.6	27.5	39.7	47.9	19.7	Swivel	Swivel

Vertical Upflow Model		Electrical Knockouts		
		J 1/2”	K 1/2”	L 3/4”
		Low Voltage	External Pump	Power Supply
018	in	3.6	6.1	8.6
	cm	9.2	15.6	21.9
024 - 030	in	3.6	6.1	8.6
	cm	9.2	15.6	21.9
036	in	3.6	6.1	8.6
	cm	9.2	15.6	21.9
042 - 048	in	3.6	6.1	8.6
	cm	9.2	15.6	21.9
060 - 070	in	3.6	6.1	8.6
	cm	9.2	15.6	21.9

Condensate is 3/4” PVC female glue socket and is switchable from front to side.
Unit shipped with deluxe duct collar/filter rack extending from unit 3” [7.6cm] and is suitable for duct connection.
Discharge flange is field installed.

Dimensions — Vertical Upflow GT-PG (50YE) Series

Vertical Upflow Model		Discharge Connection Duct Flange Installed (+/- 0.10 in, +/- 2.5mm)					Return Connection Standard Deluxe Filter Rack (+/- 0.10 in, +/- 2.5mm)			
		M Left Return	N	O Supply Width	P Supply Depth	Q Right Return	R	S Return Depth	T Return Height	U
018	in	7.2	5.8	14.0	14.0	4.9	1.7	22.2	26.2	1.5
	cm	18.3	14.8	35.6	35.6	12.4	4.2	56.4	66.4	3.9
024 - 030	in	7.2	5.8	14.0	14.0	4.9	1.7	22.2	26.2	1.5
	cm	18.3	14.8	35.6	35.6	12.4	4.2	56.4	66.4	3.9
036	in	6.4	6.3	18.0	18.0	5.3	2.1	27.1	26.1	1.5
	cm	16.1	16.0	45.7	45.7	13.5	5.4	68.9	66.4	3.9
042 - 048	in	6.4	6.3	18.0	18.0	5.3	2.1	27.1	26.1	1.5
	cm	16.1	16.0	45.7	45.7	13.5	5.4	68.9	66.4	3.9
060 - 070	in	6.4	6.3	18.0	18.0	5.3	2.1	27.1	26.1	1.5
	cm	16.1	16.0	45.7	45.7	13.5	5.4	68.9	66.4	3.9

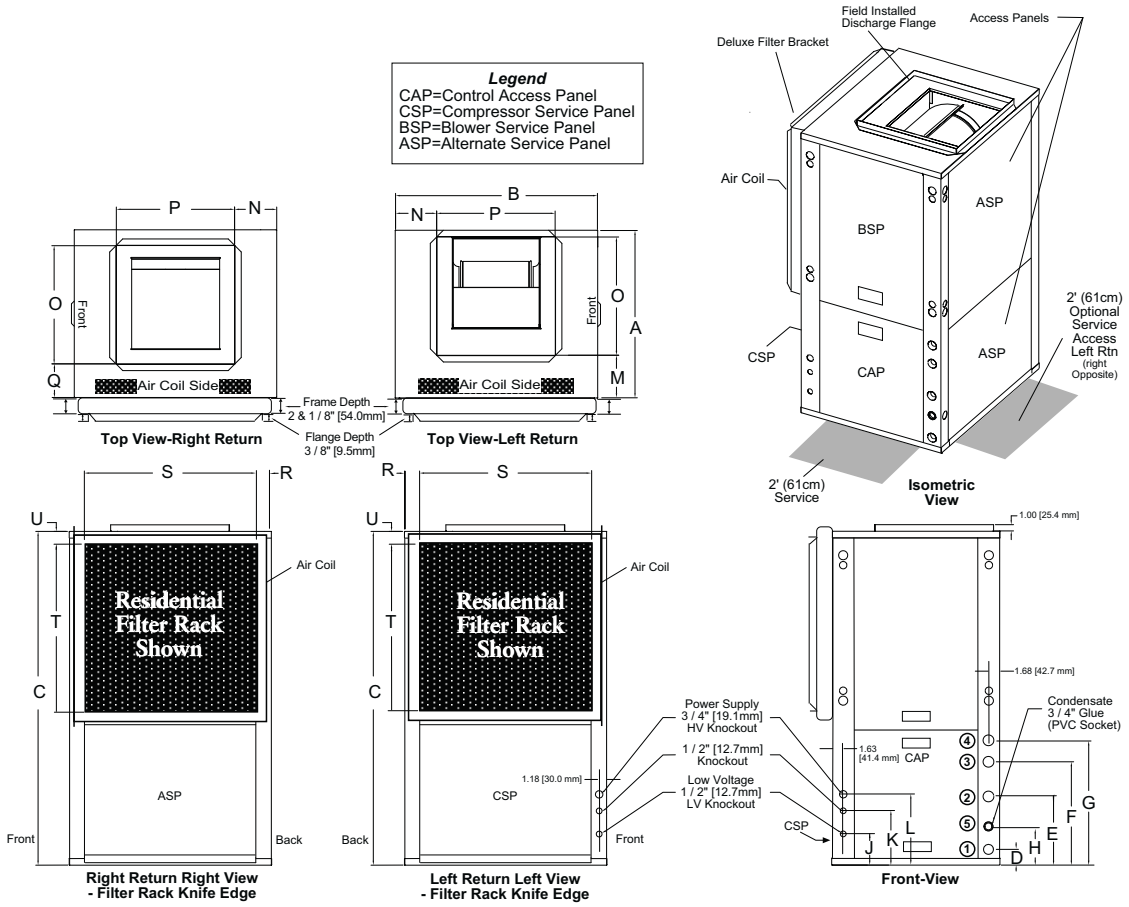

Dimensions — Vertical Downflow GT-PG (50YE) Series

Vertical Downflow Model		Overall Cabinet		
		A Width	B Depth	C Height
018	in	22.4	25.6	48.6
	cm	56.8	65.1	123.4
024 - 030	in	22.4	25.6	52.5
	cm	56.8	65.1	133.4
036	in	25.4	30.6	54.5
	cm	64.5	77.8	138.4
042 - 048	in	25.4	30.6	58.5
	cm	64.5	77.8	148.6
060 - 070	in	25.4	30.6	62.5
	cm	64.5	77.8	158.8

Vertical Downflow Model		Water Connections						
		1	2	3	4	5		
		D In	E Out	F HWG IN	G HWG Out	H Condensate	Loop Water FPT	HWG FPT
018	in	17.2	9.3	5.4	2.4	3.6	1”	1”
	cm	43.7	23.6	13.7	6.1	9.2	Swivel	Swivel
024 - 030	in	17.2	9.3	5.4	2.4	3.6	1”	1”
	cm	43.7	23.6	13.7	6.1	9.2	Swivel	Swivel
036	in	17.9	10.5	5.7	2.4	3.6	1”	1”
	cm	45.5	26.7	14.5	6.1	9.2	Swivel	Swivel
042 - 048	in	17.9	10.5	5.7	2.4	3.6	1”	1”
	cm	45.5	26.7	14.5	6.1	9.2	Swivel	Swivel
060 - 070	in	17.9	10.5	5.7	2.4	3.6	1”	1”
	cm	45.5	26.7	14.5	6.1	9.2	Swivel	Swivel

Vertical Downflow Model		Electrical Knockouts		
		J 1/2”	K 1/2”	L 3/4”
		Low Voltage	External Pump	Power Supply
018	in	15.7	13.2	10.7
	cm	39.9	33.5	27.2
024 - 030	in	15.7	13.2	10.7
	cm	39.9	33.5	27.2
036	in	17.7	15.2	12.7
	cm	45.0	38.6	32.3
042 - 048	in	17.7	15.2	12.7
	cm	45.0	38.6	32.3
060 - 070	in	17.7	15.2	12.7
	cm	45.0	38.6	32.3

Condensate is 3/4” PVC female glue socket and is switchable from front to side.
Unit shipped with deluxe duct collar/filter rack extending from unit 3” [7.6cm] and is suitable for duct connection.
Downflow unit does not have discharge flange, and is rated for zero clearance installation.

Dimensions — Vertical Downflow GT-PG (50YE) Series

Vertical Downflow Model		Discharge Connection Duct Flange Installed (+/- 0.10 in, +/- 2.5mm)					Return Connection Standard Deluxe Filter Rack (+/- 0.10 in, +/- 2.5mm)			
		M Left Return	N	O Supply Width	P Supply Depth	Q Right Return	R	S Return Depth	T Return Height	U
018	in	6.7	8.4	9.9	9.1	1.5	1.7	22.2	22.2	21.2
	cm	17.1	21.4	25.3	23.0	3.9	4.2	56.4	56.4	53.9
024 - 030	in	6.7	8.4	9.9	9.1	1.5	1.7	22.2	26.2	21.2
	cm	17.1	21.4	25.3	23.0	3.9	4.2	56.4	66.4	53.9
036	in	7.4	9.0	13.1	12.9	1.6	1.7	27.2	26.1	23.2
	cm	18.7	22.9	33.3	32.7	4.1	4.2	69.1	66.4	59.0
042 - 048	in	7.4	9.0	13.1	12.9	1.6	1.7	27.2	30.2	23.2
	cm	18.7	22.9	33.3	32.7	4.1	4.2	69.1	76.6	59.0
060 - 070	in	7.4	9.0	13.1	12.9	1.6	1.7	27.2	34.2	23.2
	cm	18.7	22.9	33.3	32.7	4.1	4.2	69.1	86.8	59.0

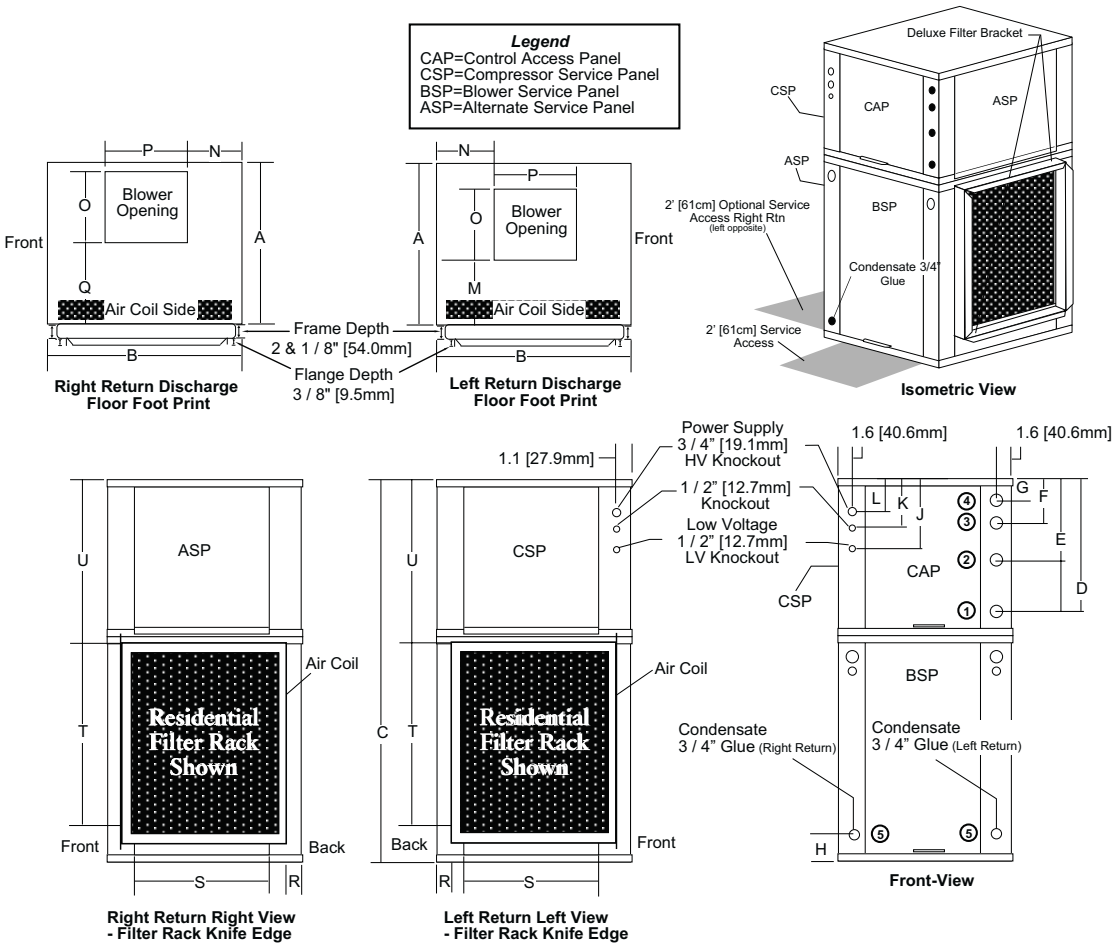

Dimensions — Horizontal GT-PG (50YE) Series

Horizontal Model		Overall Cabinet		
		A Width	B Depth	C Height
018	in	22.4	62.2	19.3
	cm	56.8	158.0	48.9
024 - 030	in	22.4	62.2	19.3
	cm	56.8	158.0	48.9
036	in	25.4	71.2	21.3
	cm	64.5	180.8	54.0
042 - 048	in	25.4	76.2	21.3
	cm	64.5	193.5	54.0
060 - 070	in	25.4	81.2	21.3
	cm	64.5	206.2	54.0

Horizontal Model		Water Connections						
		1	2	3	4	5		
		D In	E Out	F HWG IN	G HWG Out	H Condensate	Loop Water FPT	HWG FPT
018	in	2.1	10.0	13.9	16.9	0.6	1”	1”
	cm	5.2	25.4	35.2	42.9	1.5	Swivel	Swivel
024 - 030	in	2.1	10.0	13.9	16.9	0.6	1”	1”
	cm	5.2	25.4	35.2	42.9	1.5	Swivel	Swivel
036	in	3.4	10.8	15.6	18.9	0.6	1”	1”
	cm	8.6	27.5	39.7	47.9	1.5	Swivel	Swivel
042 - 048	in	3.4	10.8	15.6	18.9	0.6	1”	1”
	cm	8.6	27.5	39.7	47.9	1.5	Swivel	Swivel
060 - 070	in	3.4	10.8	15.6	18.9	0.6	1”	1”
	cm	8.6	27.5	39.7	47.9	1.5	Swivel	Swivel

Horizontal Model		Electrical Knockouts		
		J 1/2”	K 1/2”	L 3/4”
		Low Voltage	External Pump	Power Supply
018	in	3.6	6.1	8.6
	cm	9.2	15.6	21.9
024 - 030	in	3.6	6.1	8.6
	cm	9.2	15.6	21.9
036	in	3.6	6.1	8.6
	cm	9.2	15.6	21.9
042 - 048	in	3.6	6.1	8.6
	cm	9.2	15.6	21.9
060 - 070	in	3.6	6.1	8.6
	cm	9.2	15.6	21.9

Condensate is 3/4” FPT.
Unit shipped with deluxe duct collar/filter rack extending from unit 3” [7.6cm] and is suitable for duct connection.
Discharge flange and hanger brackets are factory installed.

Dimensions — Horizontal GT-PG (50YE) Series

Horizontal Model		Discharge Connection Duct Flange Installed (+/- 0.10 in, +/- 2.5mm)						Return Connection Standard Deluxe Filter Rack (+/- 0.10 in, +/- 2.5mm)			
		M	N	O Supply Height	P Supply Width	Q	R	S Return Width	T Return Height	U	V
018	in	5.0	6.8	12.5	15.5	5.0	2.1	33.8	16.2	2.2	1.0
	cm	12.7	17.3	31.8	39.4	12.7	5.3	85.8	41.0	5.6	2.5
024 - 030	in	3.6	2.0	12.5	15.5	3.6	2.0	33.8	16.2	2.3	1.5
	cm	9.3	5.1	31.8	39.4	9.2	5.2	85.8	41.0	5.8	3.9
036	in	*3.1	1.2	19.0	17.5	*3.1	1.0	34.8	18.2	3.1	1.5
	cm	7.9	3.1	48.3	44.5	7.9	2.6	88.3	46.1	7.8	3.9
042 - 048	in	3.1	1.2	19.0	17.5	3.1	1.0	39.8	18.2	3.1	1.5
	cm	7.9	3.1	48.3	44.5	7.9	2.6	101.0	46.1	7.8	3.9
060 - 070	in	3.1	1.2	19.0	17.5	3.1	1.0	44.8	18.2	3.1	1.5
	cm	7.9	3.1	48.3	44.5	7.9	2.6	113.7	46.1	7.8	3.9

*For units with modulating reheat option this dimension is 2.9" (7.4 cm).

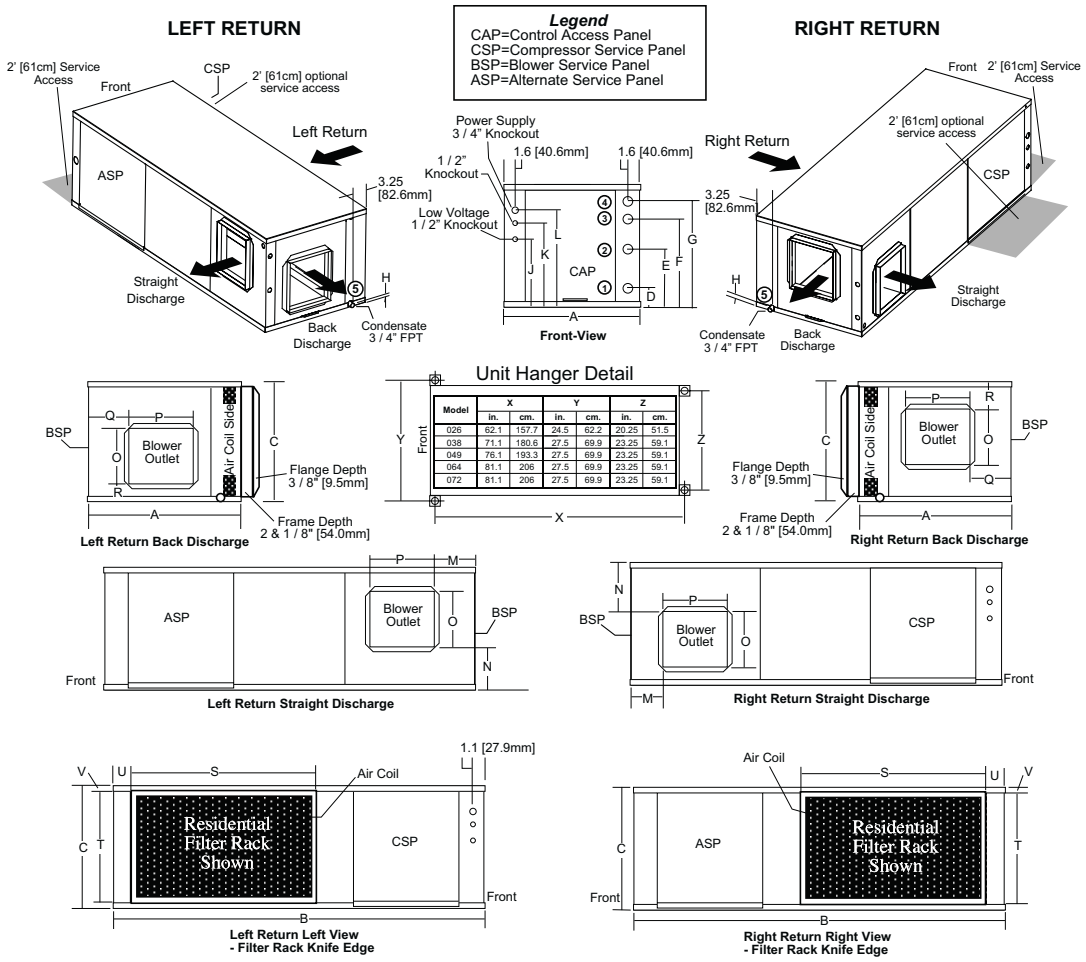

Model	X in.	X cm.	Y in.	Y cm.	Z in.	Z cm.
026	62.1	157.7	24.5	62.2	20.25	51.5
038	71.1	180.6	27.5	69.9	23.25	59.1
049	76.1	193.3	27.5	69.9	23.25	59.1
064	81.1	206	27.5	69.9	23.25	59.1
072	81.1	206	27.5	69.9	23.25	59.1

Electrical Data

Standard 50YE Unit												50YE Unit with Whole House Dehumidification					
Model	Compressor			HWG Pump FLA	Ext Loop Pump FLA	Fan Motor FLA	Total Unit FLA	Min Circuit Amps	Max Fuse/ HACR (2)	Supply Wire (2)		ClimaDry Pump FLA	Total Unit FLA	Min Circuit Amps	Max Fuse/ HACR (2)	Supply Wire (2)	
	RLA	LRA	Qty							Min AWG 60° (1, 4)	Max Length Ft (m) (3)					Min AWG 60°C (1, 4)	Max Length Ft (m) (3)
PSC Electrical Data																	
018	9.0	48.0	1	0.40	4.0	1.0	14.4	16.7	25	10	86 (26.3)	0.8	15.2	17.5	25	10	83 (25.4)
024	12.8	60.0	1	0.40	4.0	1.1	18.3	21.5	30	10	86 (26.3)	0.8	19.1	22.3	35	10	83 (25.4)
030	13.5	61.0	1	0.40	4.0	1.4	19.3	22.7	35	10	81 (24.9)	0.8	20.1	23.5	35	10	78 (24.1)
036	14.7	72.5	1	0.40	4.0	2.1	21.2	24.9	35	10	74 (22.7)	0.8	22.0	25.7	40	10	72 (22.0)
042	15.4	83.0	1	0.40	4.0	2.1	21.9	25.8	40	10	72 (21.9)	0.8	22.7	26.6	40	10	70 (21.3)
048	20.5	109.0	1	0.40	4.0	3.0	27.9	33.0	50	8	90 (27.3)	1.07	29.0	34.1	50	8	87 (26.4)
060	26.9	145.0	1	0.40	4.0	4.9	36.2	42.9	60	6	109 (33.3)	1.07	37.3	44.0	70	6	106 (32.4)
070	30.1	158.0	1	0.40	4.0	5.8	40.3	47.8	70	6	98 (29.9)	1.07	41.4	48.9	70	6	96 (29.2)
ECM Electrical Data																	
018	9.0	48.0	1	0.40	4.0	4.3	17.7	20.0	25	10	75 (22.9)	0.8	18.5	20.8	25	10	72 (22.2)
024	12.8	60.0	1	0.40	4.0	4.3	21.5	24.7	35	10	75 (22.9)	0.8	22.3	25.5	35	10	72 (22.2)
030	13.5	61.0	1	0.40	4.0	4.3	22.2	25.6	35	10	72 (22.1)	0.8	23.0	26.4	35	10	70 (21.4)
036	14.7	72.5	1	0.40	4.0	4.3	23.4	27.1	40	10	69 (20.9)	0.8	24.2	27.9	40	10	66 (20.3)
042	15.4	83.0	1	0.40	4.0	4.3	24.1	27.9	40	10	66 (20.2)	0.8	24.9	28.8	40	10	64 (19.6)
048	20.5	109.0	1	0.40	4.0	7.0	31.9	37.0	50	8	80 (24.5)	1.07	33.0	38.1	50	8	78 (23.7)
060	26.9	145.0	1	0.40	4.0	7.0	38.3	45.0	70	6	104 (31.7)	1.07	39.4	46.1	70	6	101 (31.9)
070	30.1	158.0	1	0.40	4.0	7.0	41.5	49.0	70	6	96 (29.1)	1.07	42.6	50.1	80	6	93 (28.5)

Rated Voltage of 208-230/60/1
HACR circuit breaker in USA only

Min/Max Voltage of 197/254
All fuses Class RK-5

Notes:
(1) If wire is applied at ambient greater than 86°F (30°C), consult table 310-16 of the National Electrical Code (NEC). The ampacity of non-metallic sheathed cable (NM), otherwise known as Romex cable, shall be that of 60°C (140°F) conditions per the NEC Article 336-26. If other wiring is used, consult applicable tables of the NEC.
(2) Current carrying capacity (amperes) of the wire used must not be less than the fuse/breaker size used.
(3) Wire length based on one way measurement with 2% voltage drop
(4) Wire size based on 60°C copper conductor and Minimum Circuit Ampacity.

GT-PG ECM Electrical Wiring Diagram - 96B0005N37

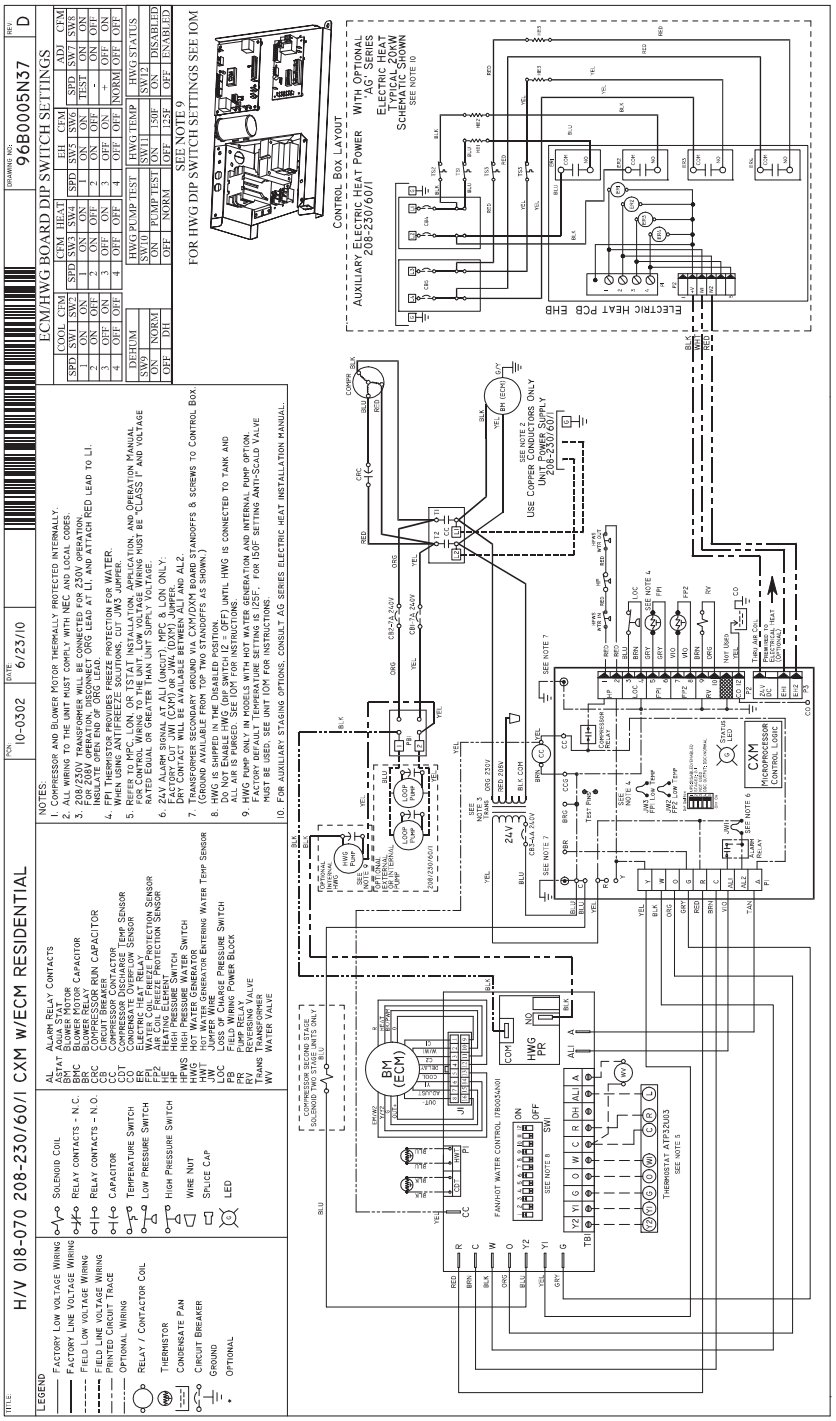

GT-PG PSC Electrical Wiring Diagram - 96B0005N36

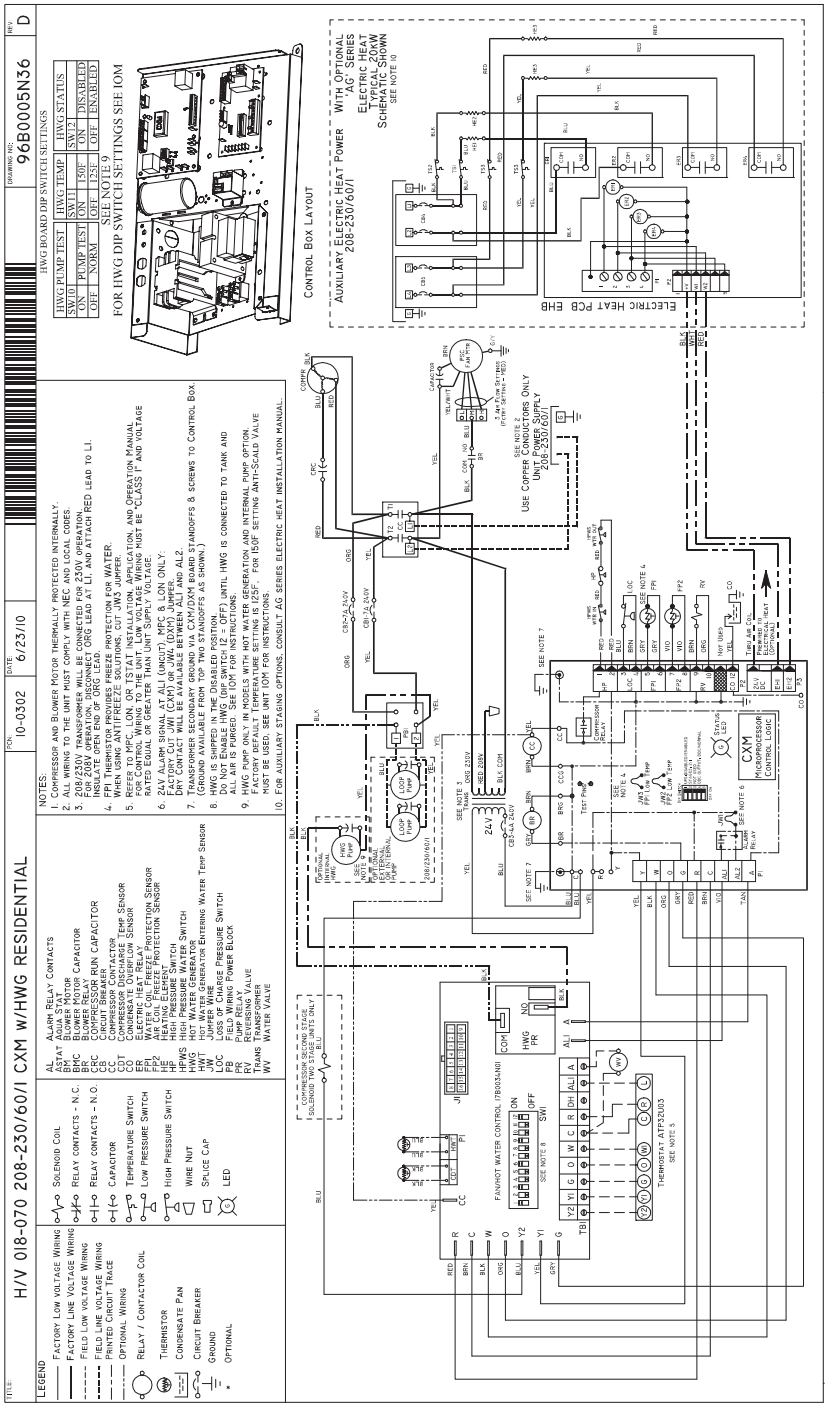

GT-PG ECM & Whole House Dehumidification Electrical Wiring Diagram - 96B0005N38

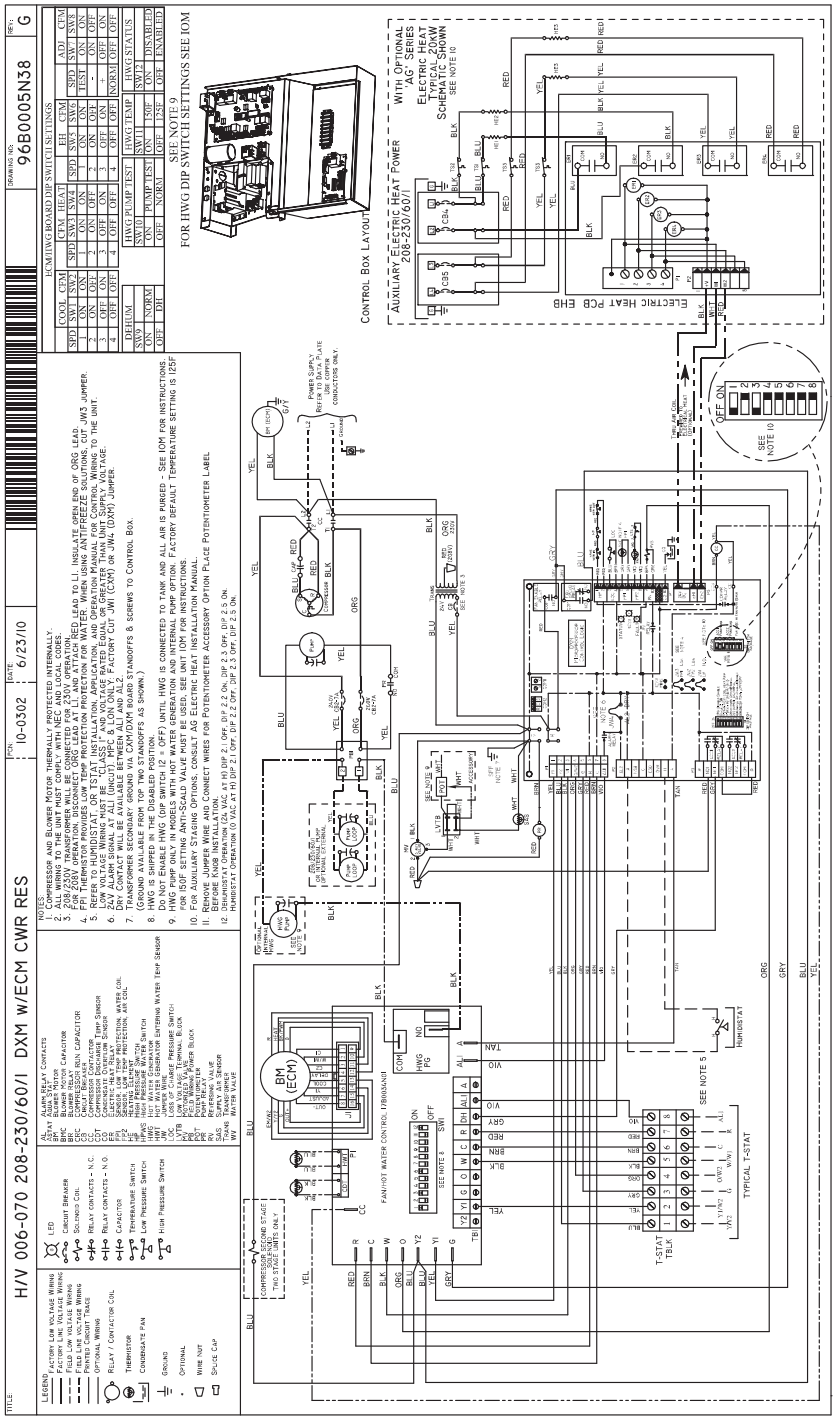

GT-PG ECM Control Features

The ECM fan is controlled by an interface board that converts thermostat inputs and field selectable CFM settings to signals used by the ECM motor controller. Units manufactured before July 2005 have version I (P/N 69243707). Units manufactured between July 2005 and May 11, 2009 have version II (P/N 17B0019N01). Fan speeds are selected with jumpers for version I or via a nine position DIP switch for version II and III. To take full advantage of the ECM motor features, a multi-stage thermostat should be used (2-stage heat/2-stage cool or 3-stage heat/2-stage cool).

HFC-410A packaged units built after May 11, 2009 have a ECM controllers version III (P/N 17B0034N01). This controller includes logic and a relay to control the HWG functions.

Note: Power must be off to the unit for at least three seconds before the ECM motor will recognize a speed change. The motor will recognize a change in the CFM Adjust or dehumidification mode settings while the unit is powered.

There are four different airflow settings from lowest airflow rate (speed tap 1) to the highest airflow rate (speed tap 4). The charts below indicate settings for both versions of the ECM interface board, followed by detailed information for each setting.

Cooling Settings: The cooling setting determines the cooling (normal) CFM for all units with ECM motor. Cooling (normal) setting is used when the unit is not in dehumidification mode. This setting also determines the heating CFM for GT-G (50YC) units. Tap 1 is the lowest CFM setting, while tap 4 is the highest CFM setting. To avoid air coil freeze-up, tap 1 may not be used if the dehumidification mode is selected. Consult submittal data or specifications catalog for the specific unit series and model to correlate speed tap setting to airflow in CFM.

Heating Settings: The heating setting determines the heating CFM for GT-PX (50YD) and GT-PG (50YE) units. This setting is not used for GT-G (50YC) units. Tap 1 is the lowest CFM setting, while tap 4 is the highest CFM setting. Consult submittal data or specifications catalog for the specific unit series and model to correlate speed tap setting to airflow in CFM.

Auxiliary/Emergency Heat Settings: The auxiliary/emergency heat setting determines the CFM when the unit is in auxiliary heat or emergency heat mode. This setting is used for residential units with internal electric heat. When auxiliary electric heat is energized (i.e. compressor and electric heat), the greater of the auxiliary/emergency or heating setting will be used. A “G” (fan) signal must be present from the thermostat for electric heat to operate. Consult the submittal data or specifications catalog for the specific unit series and model to correlate speed tap setting to airflow in CFM.

CFM Adjust Settings: The CFM adjust setting allows four selections. The NORM setting is the factory default position. The + or – settings adjust the airflow by +/- 15%. The +/- settings are used to “fine tune” airflow adjustments. The TEST setting runs the ECM motor at 70% torque, which causes the motor to operate like a standard PSC motor, and disables the CFM counter.

Dehumidification Mode Settings: The dehumidification mode setting provides field selection of humidity control. When operating in the normal mode, the cooling airflow settings are determined by the cooling tap setting above. When dehumidification is enabled there is a reduction in airflow in cooling to increase the moisture removal of the heat pump. Consult submittal data or specifications catalog for the specific unit series and model to correlate speed tap to airflow in CFM. The dehumidification mode can be enabled in two ways.

1. Constant Dehumidification Mode: When the dehumidification mode is selected (via DIP switch or jumper setting), the ECM motor will operate with a multiplier applied to the cooling CFM settings (approx. 20-25% lower airflow). Any time the unit is running in the cooling mode, it will operate at the lower airflow to improve latent capacity. The “DEHUM” LED will be illuminated at all times. Heating airflow is not affected. NOTE: Do not select dehumidification mode if cooling setting is tap 1.
2. Automatic (Humidistat-controlled) Dehumidification Mode: When the dehumidification mode is selected (via DIP switch or jumper setting) AND a humidistat is connected to terminal DH (version II) or HUM (version I), the cooling airflow will only be reduced when the humidistat senses that additional dehumidification is required. The DH (or HUM) terminal is reverse logic. Therefore, a humidistat (not dehumidistat) is required. The “DEHUM” LED will be illuminated only when the humidistat is calling for dehumidification mode. Heating airflow is not affected. NOTE: Do not select dehumidification mode if cooling setting is tap 1.

GT-PG ECM Control Features

ECM Board Tap Settings

Cooling settings: GT-PX and GT-PG Units

Tap Setting	Version I 69243707 *HP CFM* Jumper	Version II 17B0019N01 Version III 17B0034N01 DIP Switch SW1	SW2
1	1	ON	ON
2	2	ON	OFF
3	3	OFF	ON
4	4	OFF	OFF

Heating settings: GT-PG and GT-PG Units

Tap Setting	Version I 69243707 *DELAY* Jumper	Version II 17B0019N01 Version III 17B0034N01 DIP Switch SW3	SW4
1	1	ON	ON
2	2	ON	OFF
3	3	OFF	ON
4	4	OFF	OFF

Aux/Emerg Heat settings: GT-PX and GT-PG Units

Tap Setting	Version I 69243707 *AUX CFM* Jumper	Version II 17B0019N01 Version III 17B0034N01 DIP Switch SW5	SW6
1	1	ON	ON
2	2	ON	OFF
3	3	OFF	ON
4	4	OFF	OFF

CFM Adjust settings: GT-PX and GT-PG Units

Tap Setting	Version I 69243707 *CFM Adj* Jumper	Version II 17B0019N01 Version III 17B0034N01 DIP Switch SW7	SW8
TEST	1	ON	ON
-	2	ON	OFF
+	3	OFF	ON
NORM	4	OFF	OFF

Dehum Mode settings: GT-PX and GT-PG Units

Tap Setting	Version I 69243707 *Dehumid* Jumper	Version II 17B0019N01 Version III 17B0034N01 DIP Switch SW9
NORM	pins 1,2	ON
Dehumid	pins 2,3	OFF

ECM Version II Interface Layout

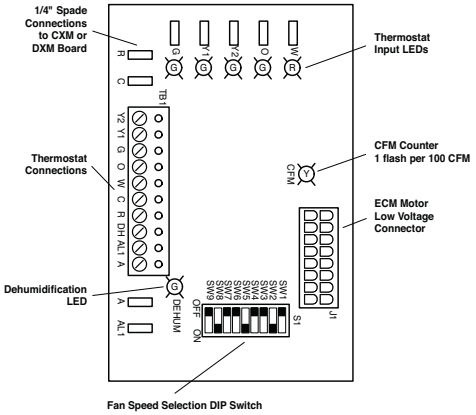

ECM Version I Interface Layout

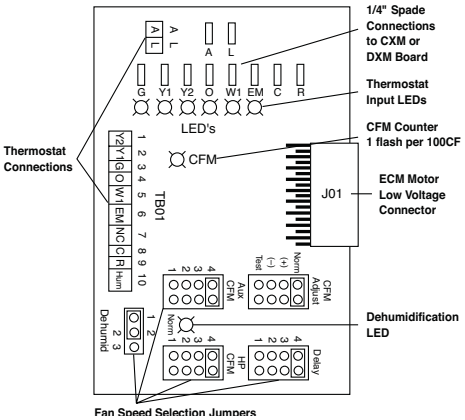

ECM Version III Interface Layout

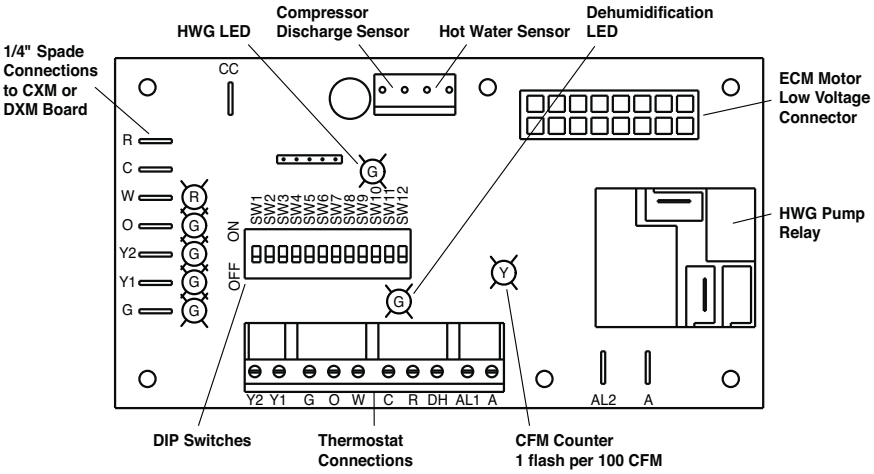

ECM Blower Performance Data

Airflow in CFM with wet coil and clean air filter

Model	Max ESP (in. wg)	Fan Motor (hp)	Tap Setting	Cooling Mode			Dehumid Mode			Heating Mode			Residential Units Only	
				Stg 1	Stg 2	Fan	Stg 1	Stg 2	Fan	Stg 1	Stg 2	Fan	AUX CFM	Aux/ Emerg Mode
018	0.50	1/2	4	640	800	400	500	620	400	640	800	400	4	800
			3	600	750	375	470	590	375	600	750	375	3	750
			2	525	650	330	400	500	330	525	650	330	2	650
			1	450	550	280				450	550	280	1	650
024	0.50	1/2	4	780	950	470	610	740	470	870	1060	470	4	1060
			3	700	850	420	540	660	420	780	950	420	3	950
			2	630	770	360	490	600	360	670	820	390	2	820
			1	550	670	300				570	690	340	1	690
030	0.50	1/2	4	920	1130	560	720	880	560	1000	1230	560	4	1230
			3	820	1000	500	640	780	500	900	1100	500	3	1100
			2	740	900	450	580	700	450	800	980	450	2	980
			1	660	800	400				700	850	400	1	850
036	0.50	1/2	4	1150	1400	700	900	1090	700	1150	1400	700	4	1400
			3	1020	1250	630	800	980	630	1020	1250	630	3	1350
			2	890	1080	540	690	840	540	890	1080	540	2	1350
			1	740	900	450				750	920	450	1	1350
042	0.50	1/2	4	1290	1580	790	1010	1230	790	1290	1580	790	4	1580
			3	1150	1400	700	900	1090	700	1150	1400	700	3	1400
			2	1050	1280	640	820	1000	640	1020	1240	640	2	1350
			1	920	1120	560				900	1080	560	1	1350
048	0.75	1	4	1420	1730	870	1110	1350	870	1520	1850	865	4	1850
			3	1270	1550	780	990	1210	780	1350	1650	775	3	1650
			2	1180	1440	720	920	1120	720	1190	1450	720	2	1450
			1	1050	1280	640				1020	1250	640	1	1350
060	0.75	1	4	1680	2050	1030	1310	1600	1030	1870	2280	1030	4	2280
			3	1500	1830	910	1170	1420	910	1680	2050	910	3	2050
			2	1400	1700	850	1090	1330	850	1480	1800	850	2	1800
			1	1300	1580	790				1270	1550	790	1	1550
070	0.75	1	4	1830	2230	1100	1420	1740	1100	1830	2230	1100	4	2230
			3	1600	1950	980	1250	1520	980	1720	2100	980	3	2100
			2	1440	1750	880	1120	1360	880	1670	1950	880	2	1950
			1	1200	1580	790				1460	1780	790	1	1780

See ECM control section for details on setting taps.
Bold numbers indicate factory settings.
During Auxiliary operation the CFM will run at the higher of the Heating (Delay jumper) or AUX settings.
Airflow is controlled within 5% up to the Max ESP shown with wet coil.
Do not select Dehumidification mode if HP CFM is on setting 1.
All units AHRI/ISO/ASHRAE 13256-1 rated HP CFM Setting 3.

PSC Blower Performance Data

Airflow in CFM with wet coil and clean air filter

Model	Fan Speed	Rated Airflow	Min CFM	Airflow (cfm) at External Static Pressure (in. wg)															
				0.00	0.05	0.10	0.15	0.20	0.25	0.30	0.35	0.40	0.45	0.50	0.60	0.70	0.80	0.90	1.00
018	HI	600	450	704	708	711	702	693	692	690	683	675	658	640	598	515			
	MED	600	450	602	601	599	590	581	583	585	579	573	560	547	492				
	LOW	600	450	531	529	527	522	517	512	506	501	495	479	462					
024	HI	850	600	965	960	954	943	931	923	914	898	882	862	842	794	725	635		
	MED	850	600	841	833	825	817	809	800	790	777	763	747	731	686	623			
	LOW	850	600	723	715	707	703	698	689	680	668	656	642	627					
030	HI	950	750	1271	1250	1229	1207	1185	1164	1143	1118	1093	1061	1029	953	875	753		
	MED	950	750	1048	1037	1025	1016	1007	994	981	962	943	915	886	822				
	LOW	950	750	890	887	884	879	874	865	855	842	829	809	789					
036	HI	1250	900	1411	1407	1402	1390	1378	1370	1361	1326	1290	1248	1205	1083	942			
	MED	1250	900	1171	1164	1156	1145	1133	1113	1092	1064	1035	997	958					
	LOW	1250	900	983	967	950	943	936	936										
042	HI	1400	1050	1634	1626	1618	1606	1594	1583	1571	1539	1507	1464	1420	1265	1078			
	MED	1400	1050	1332	1323	1314	1298	1282	1263	1243	1206	1169	1115	1060					
	LOW	1400	1050	1130	1109	1088	1086	1084	1066	1048	1052	1055							
048	HI	1600	1200	1798	1781	1764	1738	1711	1688	1665	1630	1595	1555	1514	1420	1239			
	MED	1600	1200	1384	1382	1379	1375	1371	1356	1341	1318	1294	1261	1227					
	LOW	1600	1200																
060	HI	1950	1500	2311	2306	2300	2290	2279	2268	2257	2233	2209	2175	2140	2088	1990	1901	1856	1752
	MED	1950	1500	2058	2049	2039	2028	2016	2000	1983	1966	1949	1935	1920	1874	1807	1750	1670	1582
	LOW	1950	1500	1868	1863	1858	1858	1858	1848	1838	1822	1806	1799	1792	1749	1699	1636	1570	
070	HI	2100	1800	2510	2498	2486	2471	2455	2440	2424	2401	2377	2348	2318	2247	2161	2078	1986	1855
	MED	2100	1800	2171	2167	2162	2162	2162	2158	2153	2135	2117	2101	2085	2024	1971	1891	1823	
	LOW	2100	1800	2010	2008	2006	2006	2006	2006	2006	1992	1977	1962	1947	1892	1851			

Black areas denote ESP where operation is not recommended.
Units factory shipped on medium speed. Other speeds require field selection.
All airflow is rated and shown above at the lower voltage if unit is dual voltage rated, e.g. 208V for 208-230V units.

Auxiliary Electric Heat

Auxiliary Heat Ratings

Auxiliary Electric Heat Model	GT-PE, GT-PX Packaged Models				kW Rating		Btuh Rating		Minimum CFM Required
	018	024-030	036-038	042-072	230V	208V	230V	208V	
AGM4A	■	■			3.8	2.9	13000	9900	500
AGM5A	■	■			4.8	3.6	16300	12300	500
AGM8A		■			7.6	5.7	25900	19400	650
AGM10A		■			9.6	7.2	32700	24600	650
AGL4A			■	■	3.8	2.9	13000	9900	500
AGL10A			■	■	9.6	7.2	32700	24600	1300
AGL15A			■	■	14.4	10.8	49100	36900	1350
AGL20A				■	19.2	14.4	65500	49200	1350

Black area denotes compatibility
Note: Horizontal units rated for zero clearance unit and 1" clearance for the first three feet of duct, Vertical units rated for zero clearance for both unit and duct.

Auxiliary Heat Electrical Data

Auxiliary Electric Heat Model	Supply Circuit	Heater Amps		Minimum Circuit Amps		Maximum Fuse		Supply Wire	
		230V	208V	230V	208V	230V	208V	Min AWG	Max Ft
AGM4A or C	Single	15.8	14.0	19.8	17.1	20	20	12	130
AGM5A or C	Single	20.0	17.3	25.0	21.6	25	25	10	70
AGM8A or C	Single	31.7	27.5	39.6	34.4	40	35	8	70
AGM10A or C	Single	40.0	34.7	50.0	43.4	50	45	60	90
AGL4A or C	Single	15.8	14.0	19.8	17.1	20	20	12	130
AGL10A or C	Single	40.0	34.7	50.0	43.4	50	45	6	80
AGL15A or C	Single	60.0	52.0	75.0	65.0	80	70	6	50
	Dual - L1/L3	40.0	34.7	50.0	43.4	50	45	6	80
	Dual - L2/L4	20.0	17.3	25.0	21.6	25	25	10	70
AGL20A or C	Single	80.0	69.3	100.0	86.6	100	90	2	100
	Dual - L1/L3	40.0	34.7	50.0	43.4	50	45	6	80
	Dual - L2/L4	40.0	34.7	50.0	43.4	50	45	6	80

All heaters rated single phase 208-230V 60Hz
Wire size based on 60°C (90°C) copper conductor
All models 15kW or larger feature internal circuit breakers
Wire length based on one way measurement with 2% voltage drop
All Fuses UL Class K general purpose

Engineering Guide Specifications

General
The water source heating/cooling units shall be vertical upflow air discharge. Units shall be AHRI/ISO/ASHRAE 13256-1 (ground-source closed-loop) performance certified and listed by a nationally recognized safety-testing laboratory or agency. Each unit shall be water run-tested at the factory. Each unit shall be pallet mounted and shipped with appropriate protective packaging to help avoid damage in transportation. The units shall be warranted by the manufacturer against defects in materials and workmanship for a period of 10 years on all parts, and 10 years on the compressor and refrigerant circuit parts with a service labor allowance for five years on refrigeration components and two years on other parts. An optional extended warranty is available for the GT-PG Series units, which increases the labor allowances to 10 years on all parts. The water source units shall be designed to operate with entering fluid temperature between 20°F and 120°F.

Casing & Cabinet
The cabinet shall be fabricated from heavy-gauge galvanized steel and painted with an epoxy powder coating. The interior shall be insulated with 1/2" thick, multi-density, coated glass fiber. Insulation in the air handler section shall be foil backed for ease of cleaning. Two (vertical) or one (horizontal) blower compartment and three compressor compartment access panels shall be provided and shall be removable with supply and return ductwork in place. The internal component layout shall provide for major service with the unit in-place for restricted access installations.

A duct collar (Field installed) shall be provided on the supply air opening. 2" high efficiency MERV11 pleated filters shall be provided with each unit. Units shall have filter frames. The units shall have an insulated divider panel between the air handling section and the compressor section to minimize the transmission of compressor noise, and to permit operational service testing without air bypass. Units shall be supplied with left or right air inlet.

Refrigerant Circuit
All units shall contain Puron® (HFC-410A) sealed refrigerant circuit employing a hermetic motor-compressor, bidirectional thermal expansion valve, finned tube tin plated air-to-refrigerant heat exchanger, reversing valve, coaxial tube water-to-refrigerant heat exchanger and service ports. An optional Hot Water Generator (desuperheater) coil shall be provided.

Compressors shall be Copeland scroll type designed for heat pump duty and mounted on dual level compressor vibration isolation. Compressor motors shall be single phase PSC with internal overload protection. A factory installed bidirectional filter drier shall be provided on all models. The finned tube coil shall be sized for low-face velocity and constructed of lanced aluminum fins bonded to rifled copper tubes in a staggered pattern not less than three rows deep. Entire air coil surface shall be tin-coated for corrosion protection.

The coaxial water-to-refrigerant heat exchangers shall be designed for close approach temperatures and be constructed of a convoluted copper (optional cupro-nickel) inner tube and a steel outer tube. The thermal expansion valves shall provide proper superheat over the entire fluid temperature range with minimal "hunting". The valve shall operate bi-directionally without the use of check valves.

The water-to-refrigerant heat exchanger and refrigerant suction lines shall be insulated to prevent condensation at low liquid temperatures.

Fan Motor and Blower
The fan shall be a direct drive centrifugal type with a dynamically balanced wheel. The wheel and housing shall be designed for quiet, low outlet velocity operation. The fan housing shall be of galvanized steel construction and shall be removable from the unit without disconnecting the supply air ductwork for servicing of the fan motor. The fan motor shall be of 3-speed permanently split capacitor (PSC) type. The fan motor shall be high efficiency and provide high static capability, and shall include three on-motor selectable air flow options. An optional variable speed electronically commutated (ECM) fan motor is available with permanently lubricated ball bearing construction, and it has no less than four operational speeds online. The fan motor shall be isolated from the housing by rubber grommets. The motor shall be permanently lubricated and have thermal overload protection.

Electrical
CXM Control - A microprocessor-based compressor controller shall be provided to monitor and control unit operation. The control shall provide compressor and electric heater sequencing, high and low pressure monitoring, field selectable water and air coil low temperature protection sensing, condensate overflow sensing, over/under voltage monitoring, and unit performance sentinel (UPS). The control shall also provide for water valve connection, a test mode, short cycle protection, random start-up, as well as fault LED, fault memory, and intelligent fault retry.

The control shall employ quick attach harness assemblies for low voltage connections to the control board to aid in troubleshooting or replacement. An integral terminal block with screw terminals shall be provided on the control for all field low voltage connections. A circuit breaker protected 75VA transformer shall be employed. Line voltage box lugs shall be provided for unit wiring. Units shall have knockouts for entrance of low and line voltage wiring. The fan motor and control box shall be harness plug-connected for easy removal.

Residential models shall have a dual circut-breaker protected power block for the connection of external flow controller pump module.

Piping
Supply and return water connections, as well as Hot Water Generator (desuperheater) connections shall be 1" FPT brass swivel fittings which provide a union and eliminate the need for pipe wrenches and sealants when making field connections. A thread by sweat fitting shall be provided for connection to the water heating. All water piping shall be insulated to prevent condensation at low liquid temperatures.

The condensate connection shall be a 3/4" PVC glue (socket) with internal-trap (Vertical Models).

Accessories & Warranty

Accessories & Options

Whole House Dehumidification
An optional internal whole house dehumidifier shall be factory installed, which allows the unit to operate in one of three modes, heating, cooling, or dehumidification. Operation must include modulating controls to provide neutral air (72°F) regardless of entering water temperature. Requires ATP32U04 thermostat or separate humidistat. See the Whole House Dehumidification Installation Guide/ Application Manual for more details and unit availability.

Variable Speed ECM Fan Motor
An optional soft-starting, high efficiency, variable speed fan motor shall be provided with multiple fan speeds and dehumidification mode to improve comfort and efficiency.

Hot Water Generator
An optional insulated heat reclaiming desuperheater coil of vented double-wall copper construction suitable for potable water shall be provided. The coil and hot water circulating pump shall be factory mounted inside the unit. A high limit and low compressor discharge line temperature switch shall be provided to disable the pump when these conditions occur.

Cupro-Nickel Heat Exchanger
An optional corrosion resistant CuNi coaxial heat exchanger shall be factory installed in lieu of standard copper construction.

Thermostat (field installed)
A multistage auto-changeover electronic digital thermostat shall be provided. The thermostat shall offer 3 heating and 2 cooling stages with precise temperature control. An OFF-HEAT-AUTO-COOL-EMERG system switch, OFF-AUTO fan switch, and indicating LED's shall be provided. The thermostat shall read out in °F or °C. An optional remote indoor sensor and outdoor sensor shall be available on some models.

Flow Controller (field installed)
A self-contained module shall provide all fluid pumping, fill and connection requirements for ground-source closed-loop systems up to 20 GPM. The Flow Controller shall provide 1" pump isolation valves and 3-way service valves. Pump heads shall be removable from the volute for easy replacement. The Flow Controller shall be enclosed in a polystyrene case and fully insulated with urethane foam to prevent condensation. The Flow Controller shall have a 5-year warranty on all parts.

Auxiliary Heater (field installed)
An internal, field-installed electric heater shall provide supplemental and/or emergency heating capability when used with the three stage heating thermostat. (Heater is externally mounted on horizontal units).

Hose Connection Kit (field installed)
An accessory hose kit shall provide 150psi 1" rubber hose with brass fittings equipped with service pressure/temperature ports for connection between the unit and Flow Controller.

Warranty Information

The 2010 standard warranty applies to units ordered on or after July 1, 2010. See Carrier's 2010 Limited Express Residential Warranty Certificate CA234 for specific coverage and limitation.

Carrier residential class heat pumps are backed by a ten-year limited warranty on all unit parts, including the following accessories when installed with Carrier units: Flow Controllers & Electric Heaters.

Carrier goes even further to back up its commitment to quality by including a service labor allowance for the first five years on refrigeration circuit components and two years on all other parts, auxiliary heaters and geothermal pumping modules.

The Optional Extended Factory Service Labor Allowance Warranty offers additional length of term protection to the consumer by offsetting service labor costs for 10 years.

To order this warranty, contact your Carrier distributor. This coverage must be purchased within 90 days of unit installation. See Limited Express Extended Labor Warranty Certificate CA235 for details.

Notes

Revision History

Date	Page #	Description
25 Aug., 10	153	Horizontal units supply air dimension M and Q updated
21 July, 10	Wiring Diagram Pages	Wire Diagram revision: water-side high pressure switches added
14 July, 10	Various	Compressor isolation upgrade from Springs to grommets
01 July, 10	Various	Warranty, Paint, Nomenclature Updates
04 June, 10	153	Dim. M & Q Changed
01 June, 10	Various	Warranty, Tin-Plated Coils, Paint, Nomenclature Updates
02 June, 09	All	Removed R22 Units and Related Data
01 Jan, 09	All	Reformatted Document Size
03 Mar, 08	163	Updated Specifications
03 Mar, 08	150	Updated Downflow Dimensional Data
03 Mar, 08	Various	Updated Size 018 Data
05 Mar, 07	154	Added New Notes to Electrical Data
05 Mar, 07	163	Removed Incorrect Model From Table
05 Mar, 07	152	Updated Horizontal Dimensional Data
01 Oct, 08	All	First Published